June 16, 1953 N. E. PEELER 2,641,792

HINGE GUARD

Filed Jan. 17, 1950

FIG. 1.

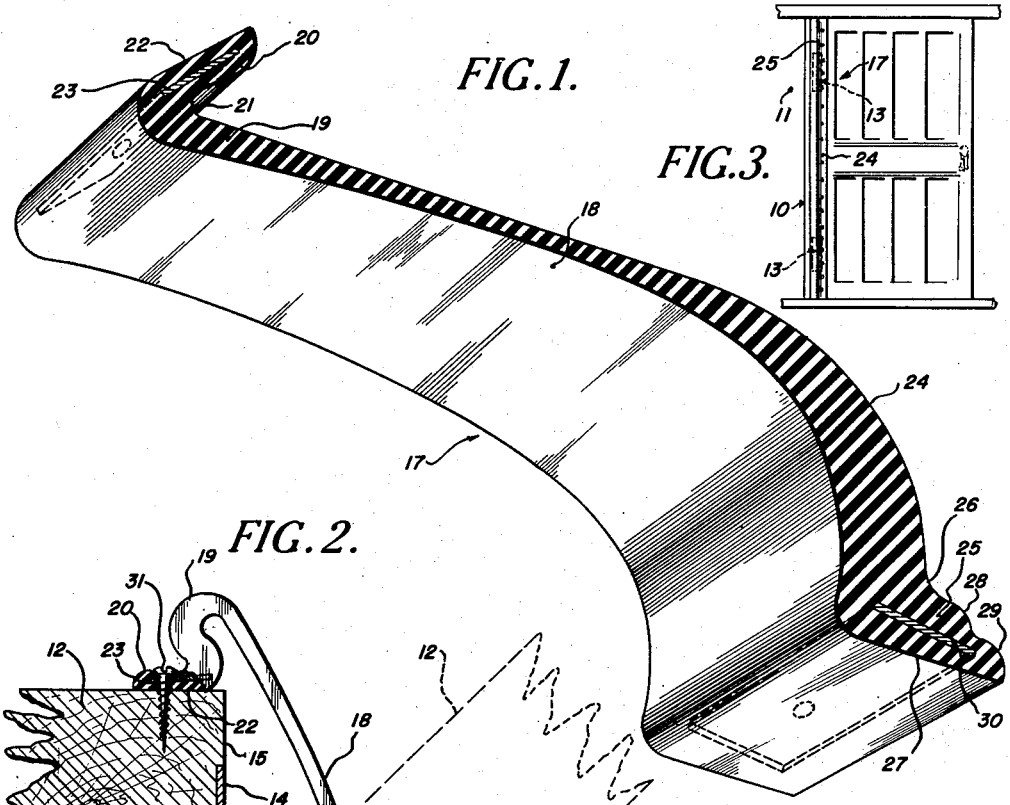

FIG. 3.

FIG. 2.

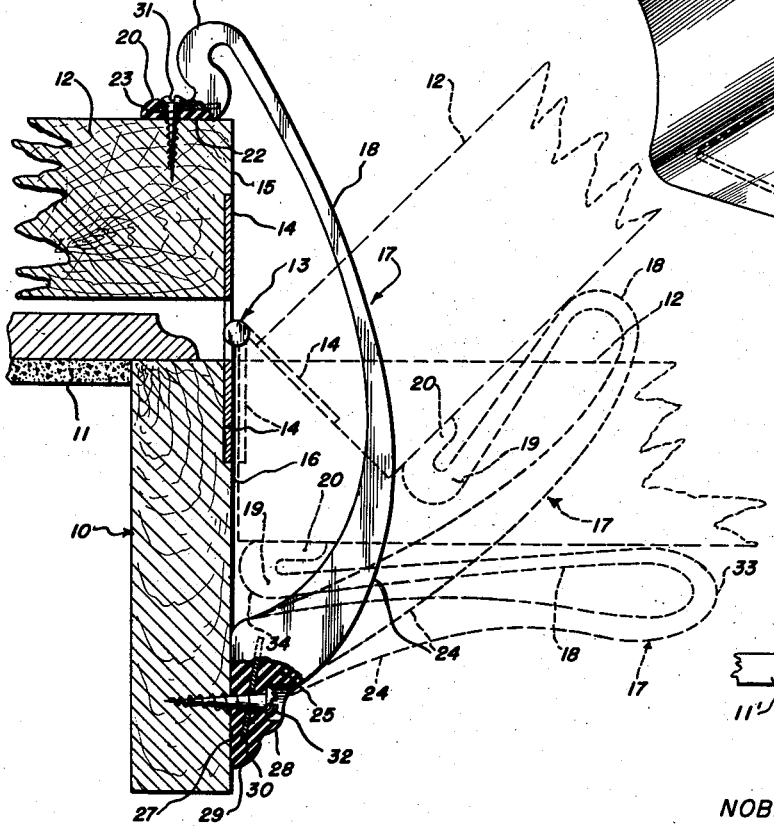

FIG. 4.

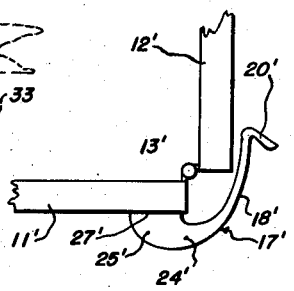

INVENTOR.
NOBLE E. PEELER

BY

McMorrow, Berman & Davidson
ATTORNEYS