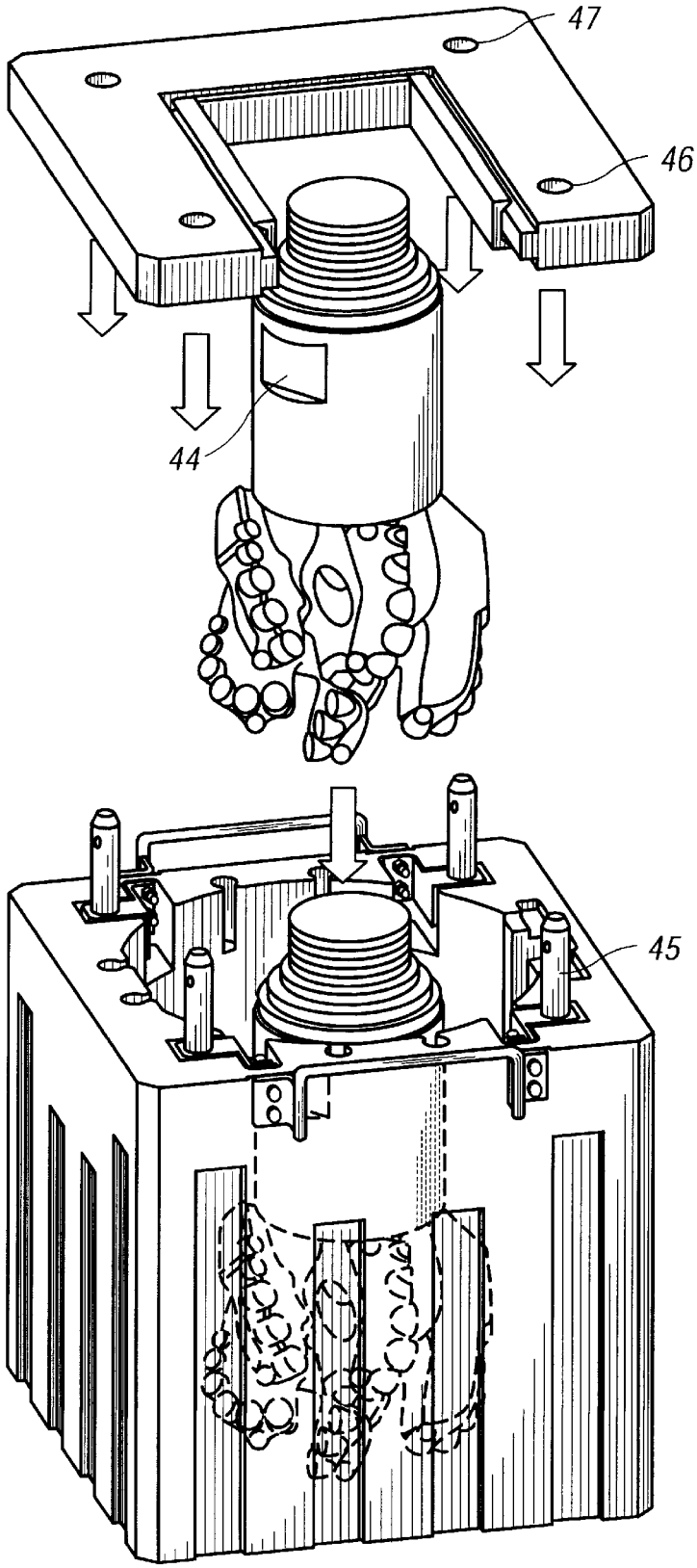

FIG. 4
(PRIOR ART)