US006536192B2

(12) **United States Patent**
King et al.

(10) **Patent No.: US 6,536,192 B2**
(45) **Date of Patent: Mar. 25, 2003**

(54) **DRILL BIT PACKAGES AND METHODS**

(75) Inventors: **William W. King**, Houston, TX (US); **William C. Saxman**, Cedar Hill, TX (US); **Jeffery Peck**, DeSoto, TX (US); **James S. Dahlem**, Midlothian, TX (US); **Karl D. Knecht**, Arlington, TX (US); **Lee M. Smith**, Houston, TX (US); **Margaret L. Parks**, Dallas, TX (US); **Mike Jeziorski**, Miami Beach, FL (US); **Patsy A. Jenner**, DeSoto, TX (US)

(73) Assignees: **Halliburton Energy Services, Inc.**, Carrollton, TX (US); **Relocation Systems, Inc.**, Dallas, TX (US)

(*) Notice: Subject to any disclaimer, the term of this patent is extended or adjusted under 35 U.S.C. 154(b) by 0 days.

(21) Appl. No.: **09/845,054**

(22) Filed: **Apr. 27, 2001**

(65) **Prior Publication Data**

US 2002/0014425 A1 Feb. 7, 2002

Related U.S. Application Data

(60) Provisional application No. 60/218,304, filed on Jul. 14, 2000.

(51) **Int. Cl.**[7] **B29C 41/00**; B65B 69/00; B65D 21/036; B65D 25/28; B65D 43/00

(52) **U.S. Cl.** **53/476**; 53/492; 206/349; 206/379; 206/508; 206/509; 220/8; 220/318; 220/772; 264/310; 414/810

(58) **Field of Search** 206/349, 379, 206/446, 523, 525, 597, 508, 509; 53/476, 492; 156/304.2; 220/1.5, 8, 318, 772; 264/310–312; 414/810

(56) **References Cited**

U.S. PATENT DOCUMENTS

1,450,674	A	*	4/1923	Marston	220/8
2,960,250	A	*	11/1960	Haloski	220/772
3,964,605	A	*	6/1976	Vezirian	206/349
4,244,469	A	*	1/1981	Miner	206/349
4,545,501	A	*	10/1985	Deford	220/318
4,733,789	A	*	3/1988	Olson	206/379
4,872,563	A	*	10/1989	Warder et al.	206/523
5,111,938	A	*	5/1992	Soprano et al.	206/597
5,588,531	A	*	12/1996	Yoshida et al.	206/523
5,692,631	A	*	12/1997	Tillard et al.	220/1.5

* cited by examiner

Primary Examiner—Jim Foster
(74) *Attorney, Agent, or Firm*—Robert Groover

(57) **ABSTRACT**

A plastic canister for storing and shipping drill bits, especially roller cone drill bit, has a pin-holder built into the lid of the canister for ease of field dressing the bit. The lid and body of the container are slip fit to one another and indexed to each other for positive positioning in their relationship. Safety features include the use of a conductive plastic polymer, a non-rolling base, mating protrusions and recesses for stacking, recessed areas for strapping, and welded loop handles.
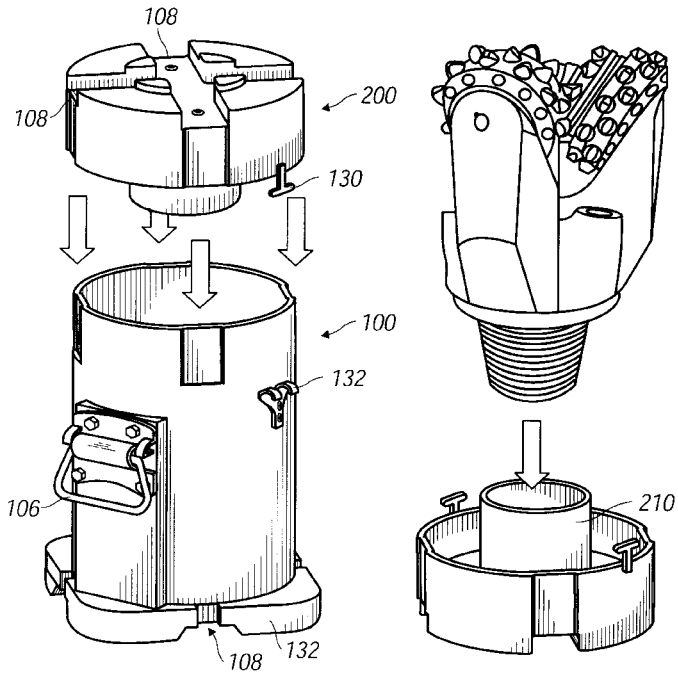
22 Claims, 5 Drawing Sheets