Sept. 8, 1931. F. LAMB 1,822,492

CARD DISPLAY

Filed April 26, 1929

Fig. 1.

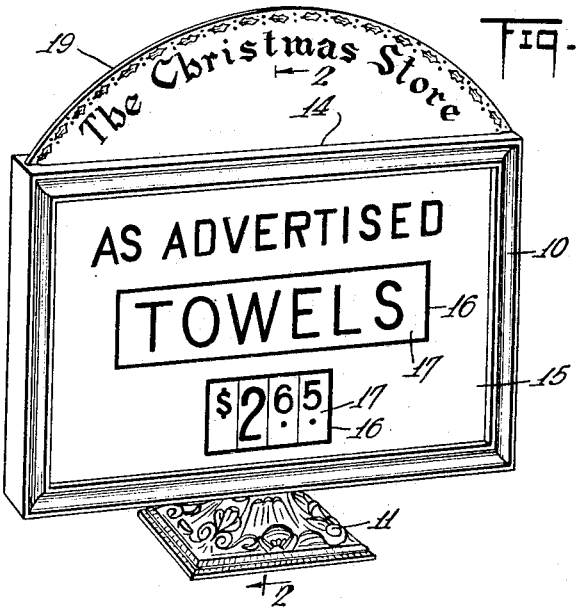

Fig. 2.

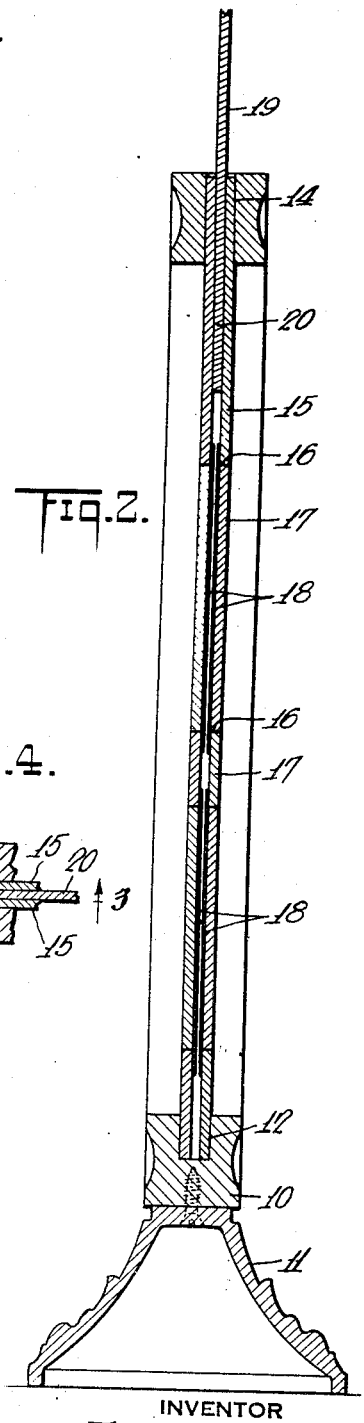

Fig. 3.

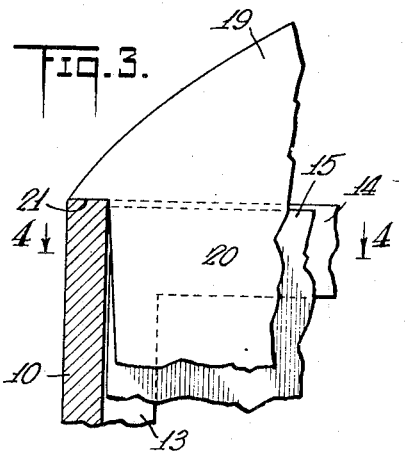

Fig. 4.

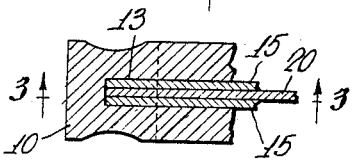

Fig. 5.

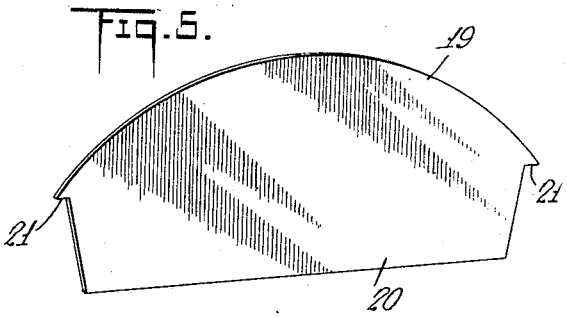

INVENTOR
Franklin Lamb
BY
Kleau, Fairbank, Albright & Hirsch
his ATTORNEYS