350-379 SR SEARCH ROO

OR 3,520,592

X4021 V X4038R

X4050 T

July 14, 1970 K. G. LEIB ET AL 3,520,592

OPTICAL FOCUSING SYSTEM UTILIZING BIREFRINGENT LENSES

Filed Sept. 14, 1967 4 Sheets-Sheet 1

FIG. 1

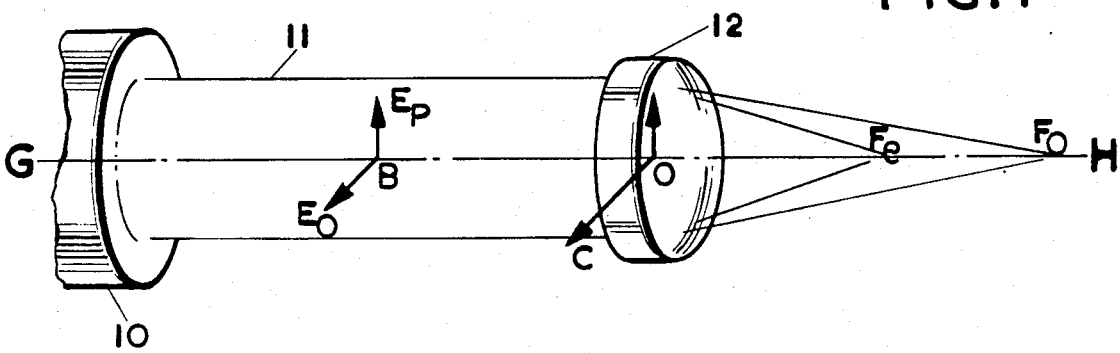

FIG. 2

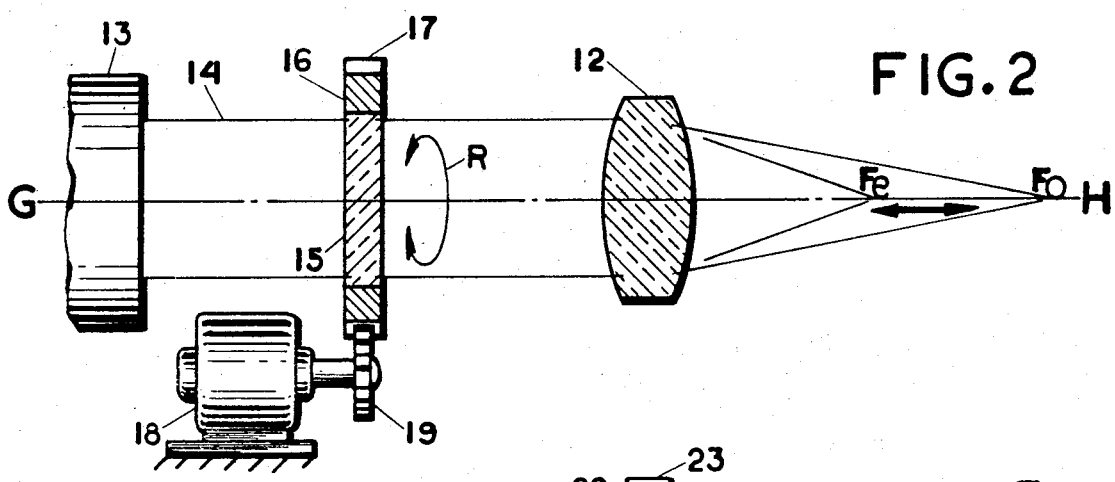

FIG. 3

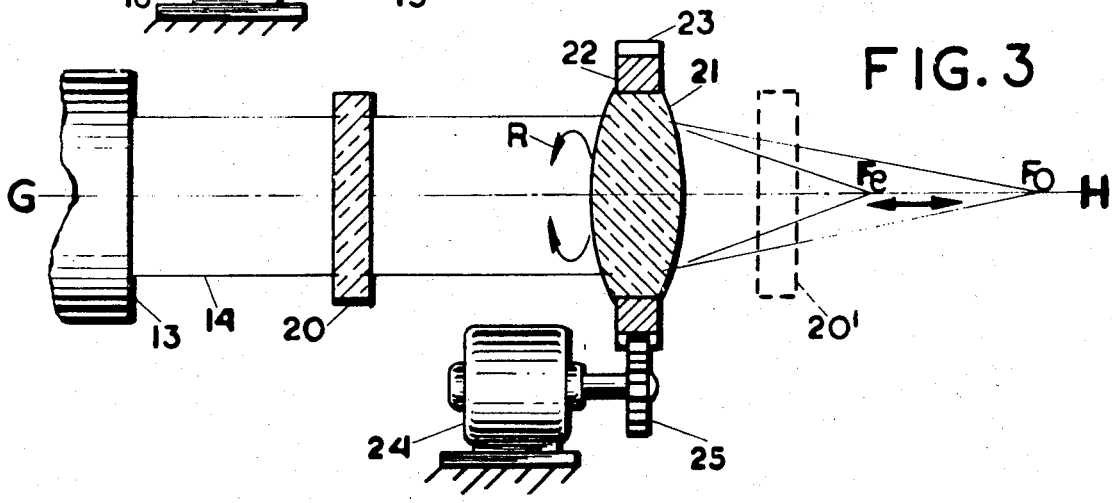

INVENTORS
KENNETH G. LEIB
RICHARD S. ENG

BY

ATTORNEY