No. 613,592. Patented Nov. 1, 1898.

J. J. NAGLEY.

DOOR GUARD.

(Application filed Feb. 5, 1898.)

(No Model.)

Fig 1.

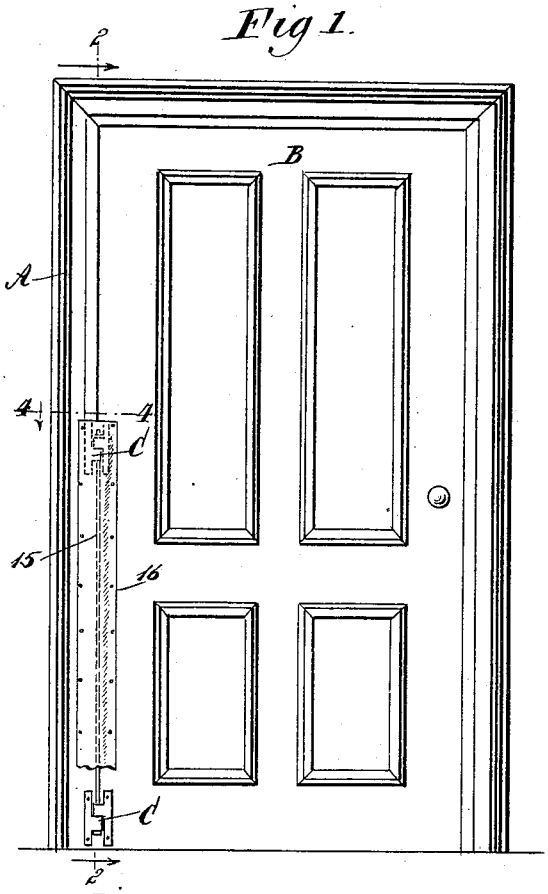

Fig 2.

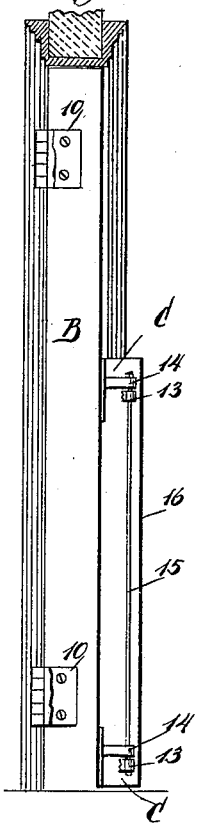

Fig 6.

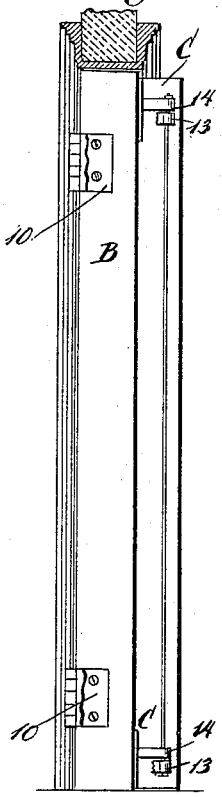

Fig 3.

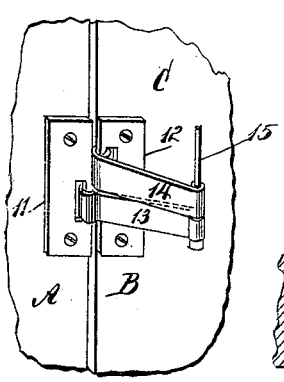

Fig 4.

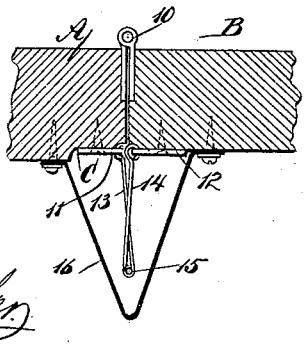

Fig 5.

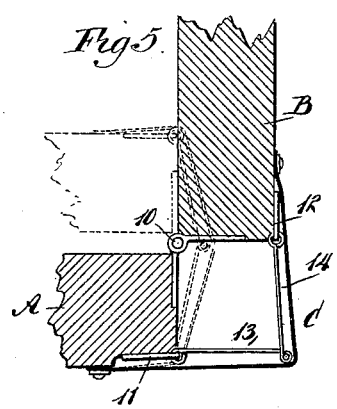

WITNESSES:

Paul Johst

J. Fred Acker

INVENTOR

J. J. Nagley

BY

Munn & Co

ATTORNEYS.

THE NORRIS PETERS CO., PHOTO-LITHO., WASHINGTON, D. C.