US009410692B2

(12) **United States Patent**
Wang et al.

(10) **Patent No.: US 9,410,692 B2**
(45) **Date of Patent: Aug. 9, 2016**

(54) **FURNITURE WITH LED LIGHT ARRANGEMENT**

(71) Applicants: **George Wang**, City of Industry, CA (US); **Rocky Young**, City of Industry, CA (US)

(72) Inventors: **George Wang**, City of Industry, CA (US); **Rocky Young**, City of Industry, CA (US)

(73) Assignee: **Import Direct Inc.**, City of Industry, CA (US)

(*) Notice: Subject to any disclaimer, the term of this patent is extended or adjusted under 35 U.S.C. 154(b) by 125 days.

(21) Appl. No.: **14/256,036**

(22) Filed: **Apr. 18, 2014**

(65) **Prior Publication Data**

US 2015/0300627 A1 Oct. 22, 2015

(51) **Int. Cl.**

A47B 13/12	(2006.01)
F21V 33/00	(2006.01)
F21S 4/00	(2016.01)
A47C 1/00	(2006.01)
F21V 23/04	(2006.01)
F21W 131/301	(2006.01)
F21Y 103/00	(2016.01)

(52) **U.S. Cl.**

CPC ***F21V 33/0012*** (2013.01); ***A47B 13/12*** (2013.01); ***A47C 1/00*** (2013.01); ***F21S 4/20*** (2016.01); *A47B 2220/0077* (2013.01); *F21V 23/0464* (2013.01); *F21V 23/0471* (2013.01); *F21W 2131/301* (2013.01); *F21Y 2103/003* (2013.01)

(58) **Field of Classification Search**

CPC A47B 13/08; A47B 13/12; F21V 23/0464; F21V 23/0471; F21V 33/0012; F21S 9/02; F21S 4/20; F21W 2131/301; A47C 1/00

USPC 108/23

See application file for complete search history.

(56) **References Cited**

U.S. PATENT DOCUMENTS

5,345,737	A *	9/1994	Latchinian	A47B 57/565 403/172
7,611,417	B2 *	11/2009	Murrey	A63D 15/00 473/1
8,419,140	B2 *	4/2013	Ward	A47B 81/00 211/85.27
2006/0087165	A1 *	4/2006	Gharabegian	A47C 7/725 297/217.6
2007/0177381	A1 *	8/2007	Kwiatt, III	A47B 13/083 362/249.16
2014/0369063	A1 *	12/2014	Kleo	F21V 33/0012 362/551

FOREIGN PATENT DOCUMENTS

DE	202010007922 U	*	12/2011	A47B 77/022
DE	102012107280 A1	*	9/2013	F21V 33/0012

* cited by examiner

Primary Examiner — Alan Cariaso

(74) *Attorney, Agent, or Firm* — Raymond Y. Chan; David and Raymond Patent Firm

(57) **ABSTRACT**

An article of furniture includes a furniture body having a utilizing surface and a non-utilizing surface, and a light arrangement which includes a plurality of LEDs embedded in the non-utilizing surface of the furniture body for adding decorating and illuminating functions of the furniture body. The installation of the light arrangement is simple without disassembling the furniture body.
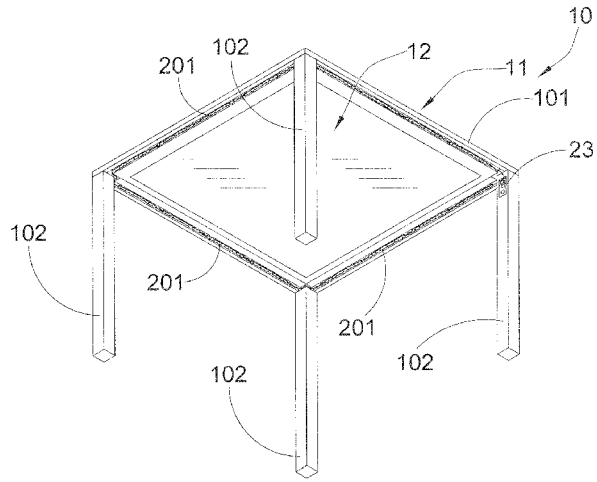
1 Claim, 6 Drawing Sheets