US009409692B2

(12) **United States Patent**
Babey et al.

(10) **Patent No.: US 9,409,692 B2**
(45) **Date of Patent: Aug. 9, 2016**

(54) **FLEXIBLE SHIPMENT PACKAGING**

(75) Inventors: **Matthias Babey**, Potsdam (DE); **Gerhard Graumüller**, Gera (DE); **Matthias Jungbluth**, Berlin (DE); **Reinhard Krannig**, Bürgel (DE); **Carsten Köppen**, Berlin (DE); **Volker Tränkle**, Stuttgart (DE); **Gunther Wendt**, Berlin (DE); **Rolf Wilkenhöner**, Kleinmachnow (DE)

(73) Assignee: **SIEMENS AKTIENGESELLSCHAFT**, München (DE)

(*) Notice: Subject to any disclaimer, the term of this patent is extended or adjusted under 35 U.S.C. 154(b) by 893 days.

(21) Appl. No.: **13/512,991**

(22) PCT Filed: **Dec. 3, 2009**

(86) PCT No.: **PCT/EP2009/066343**

§ 371 (c)(1),
(2), (4) Date: **Aug. 6, 2012**

(87) PCT Pub. No.: **WO2011/066859**

PCT Pub. Date: **Jun. 9, 2011**

(65) **Prior Publication Data**

US 2013/0134069 A1 May 30, 2013

(51) **Int. Cl.**
B65D 85/62 (2006.01)
B65D 81/02 (2006.01)
(Continued)

(52) **U.S. Cl.**
CPC ***B65D 81/022*** (2013.01); ***B65D 19/04*** (2013.01); ***B65D 25/04*** (2013.01); ***B65D 25/108*** (2013.01); ***B65D 81/113*** (2013.01); ***B65D 85/68*** (2013.01); *B65D 2519/00034* (2013.01); *B65D 2519/00069* (2013.01); *B65D 2519/0086* (2013.01); *B65D 2519/00174* (2013.01); *B65D 2519/00208* (2013.01); *B65D 2519/00268* (2013.01); *B65D 2519/00288* (2013.01); *B65D 2519/00318* (2013.01); *B65D 2519/00333* (2013.01);
(Continued)

(58) **Field of Classification Search**
CPC B65D 19/04; B65D 81/022; B65D 25/108; B65D 25/04; B65D 85/68; B65D 81/113
USPC 206/443, 499, 503, 509, 523, 585, 587, 206/591, 592, 593; 220/212, 253, 528, 529, 220/553; 229/120.02, 120.06; 410/34, 44, 410/45
See application file for complete search history.

(56) **References Cited**

U.S. PATENT DOCUMENTS

1,305,908 A * 6/1919 Lanier 206/499
3,306,439 A * 2/1967 Storey 206/499
(Continued)

FOREIGN PATENT DOCUMENTS

EP 0197244 A2 10/1986
EP 0486489 B1 11/1994
(Continued)

Primary Examiner — Luan K Bui

(57) **ABSTRACT**

A shipment packaging for elongate components is provided. Turbine blades must be sent from remote locations of the world to another location. During shipment, the coating of the turbine blades must be protected. The turbine blades are fixed at both ends by means of shipment packaging so that the turbine blades are protected.
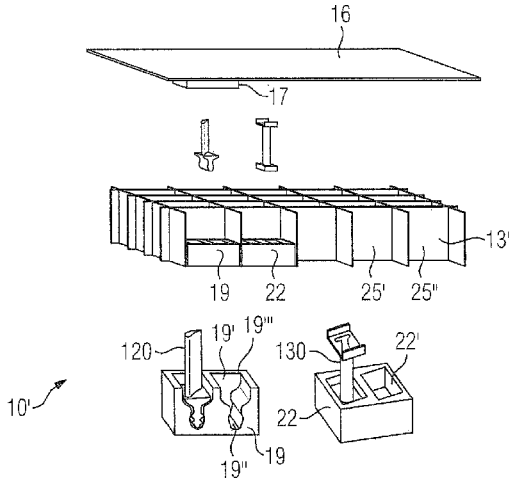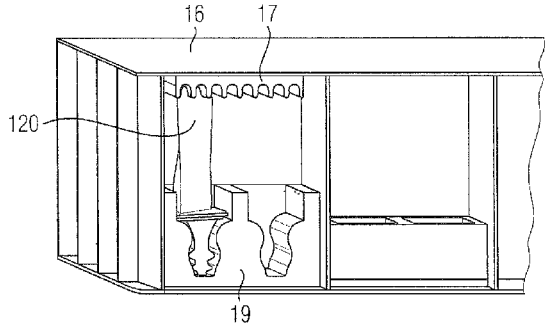
8 Claims, 7 Drawing Sheets