US009409592B2

(12) **United States Patent**
Pfeiffer

(10) **Patent No.: US 9,409,592 B2**
(45) **Date of Patent: Aug. 9, 2016**

(54) **LIMITING DEVICE FOR THE STEERING ANGLE INPUT IN AN ELECTRICAL STEERING SYSTEM**

(71) Applicant: **AUDI AG**, Ingolstadt (DE)

(72) Inventor: **Ulrich Pfeiffer**, Karlskron/Probfeld (DE)

(73) Assignee: **AUDI AG**, Ingolstadt (DE)

(*) Notice: Subject to any disclaimer, the term of this patent is extended or adjusted under 35 U.S.C. 154(b) by 0 days.

(21) Appl. No.: **14/771,994**

(22) PCT Filed: **Feb. 12, 2014**

(86) PCT No.: **PCT/EP2014/000387**
§ 371 (c)(1),
(2) Date: **Sep. 1, 2015**

(87) PCT Pub. No.: **WO2014/135247**
PCT Pub. Date: **Sep. 12, 2014**

(65) **Prior Publication Data**

US 2016/0009312 A1 Jan. 14, 2016

(30) **Foreign Application Priority Data**

Mar. 8, 2013 (DE) 10 2013 004 055

(51) **Int. Cl.**
B62D 5/00 (2006.01)
B60R 25/021 (2013.01)
B60R 25/0215 (2013.01)

(52) **U.S. Cl.**
CPC ***B62D 5/001*** (2013.01); ***B60R 25/02115*** (2013.01); ***B62D 5/005*** (2013.01); ***B62D 5/006*** (2013.01); *B60R 25/0215* (2013.01)

(58) **Field of Classification Search**
CPC B62D 5/001; B62D 5/006
See application file for complete search history.

(56) **References Cited**

U.S. PATENT DOCUMENTS

6,481,526	B1	11/2002	Millsap et al.	
2003/0146037	A1	8/2003	Menjak et al.	
2003/0146038	A1*	8/2003	Mills	B62D 5/001 180/422
2004/0011585	A1*	1/2004	Menjak	B62D 5/006 180/402
2013/0075185	A1*	3/2013	Sugai	B62D 5/001 180/402
2013/0118289	A1*	5/2013	Yamanaka	B62D 1/16 74/492
2013/0161116	A1*	6/2013	Tashiro	B62D 5/0403 180/446
2013/0249252	A1	9/2013	Schmid et al.	
2014/0028007	A1	1/2014	Pfeiffer	

FOREIGN PATENT DOCUMENTS

DE	603 03 081	7/2006
EP	1 182 115	2/2002
EP	2 457 806	5/2012
FR	2 720 365	12/1995
FR	2 877 304	5/2006
FR	2 889 150	2/2007

OTHER PUBLICATIONS

International Search Report issued by the European Patent Office in International Application PCT/EP2014/000387.

* cited by examiner

Primary Examiner — Terence Boes
(74) *Attorney, Agent, or Firm* — Henry M. Feiereisen LLC

(57) **ABSTRACT**

A limiting device for the steering angle input in an electrical steering system includes a gearing that is arranged on a steering shaft to enable for a threaded piece an adjustment path corresponding to the maximum permissible number of revolutions of the steering wheel, and steering stops for limiting the adjustment path of the threaded piece. A motor-driven drive mechanism is provided for the steering stops, by which the steering stops can be moved uniformly towards or away from one another.
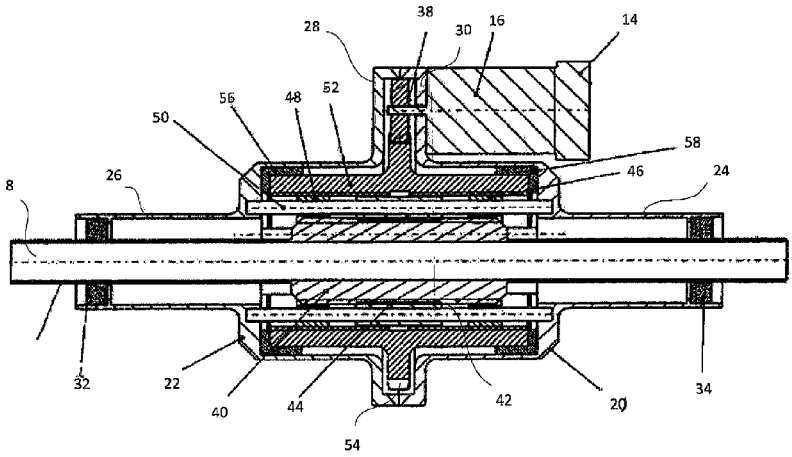
4 Claims, 3 Drawing Sheets