FLUID FILTER WITH AUTOMATIC CLEANING DEVICE

Filed May 31, 1966 3 Sheets-Sheet 2

Fig. 3

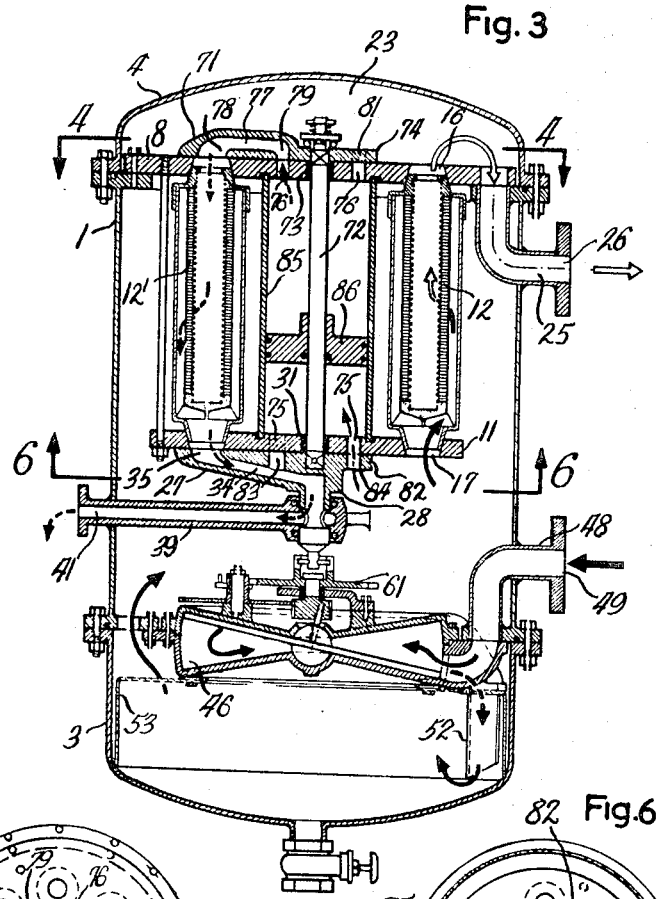

Fig.4

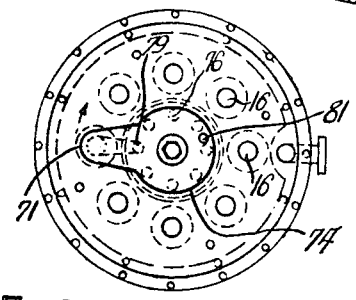

Fig.6

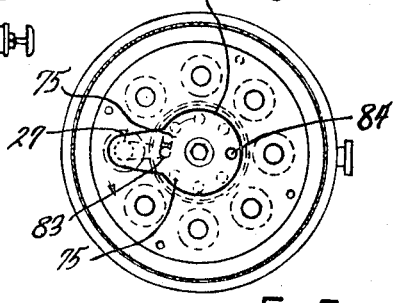

Fig.5

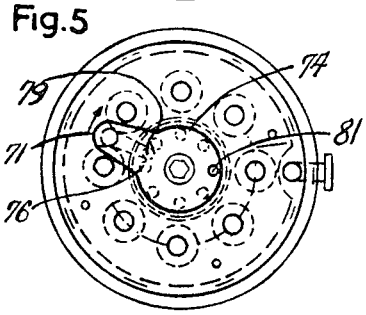

Fig.7

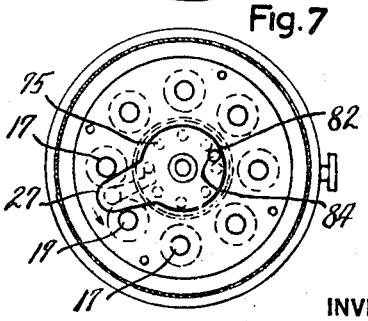

INVENTOR
JACQUES MULLER

BY Arthur B. Colvin
ATTORNEY