FLUID FILTER WITH AUTOMATIC CLEANING DEVICE

Filed May 31, 1966 3 Sheets-Sheet 1

Fig. 1

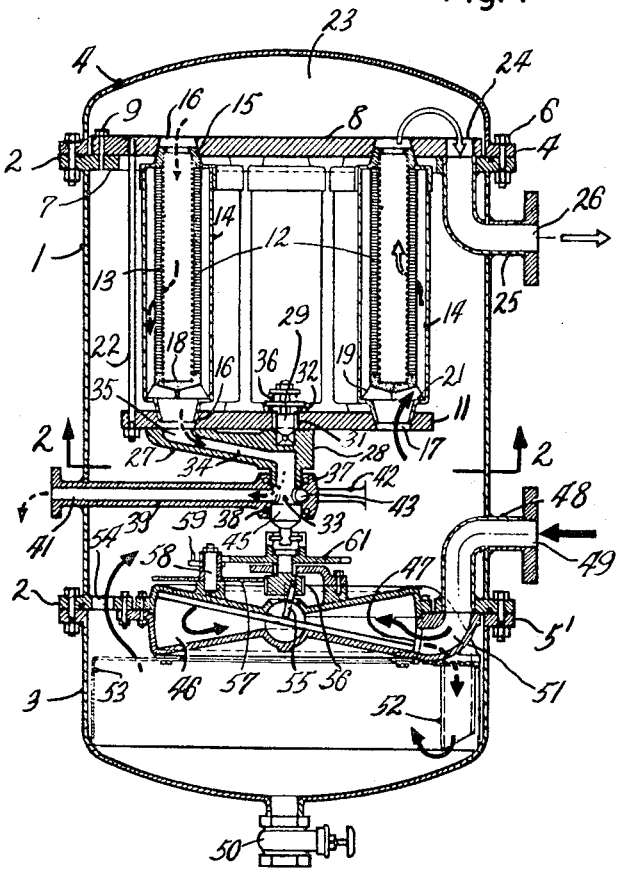

Fig. 2

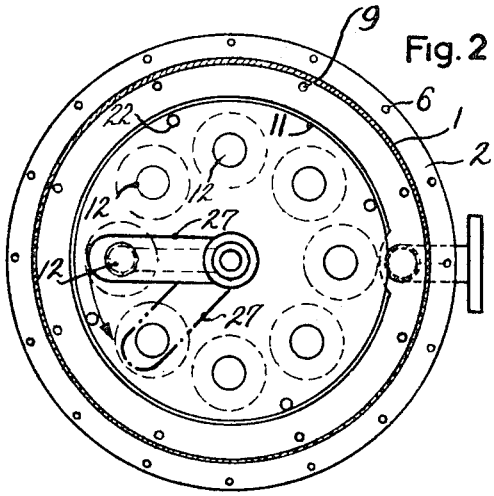

INVENTOR
JACQUES MULLER

BY
ATTORNEY