US008176591B2

(12) **United States Patent**
Iwahori et al.

(10) **Patent No.: US 8,176,591 B2**
(45) **Date of Patent: May 15, 2012**

(54) **ELECTRICAL TOOTHBRUSH**

(75) Inventors: **Toshiyuki Iwahori**, Mishima-gun (JP); **Kota Tomida**, Kyoto (JP); **Kenji Hashino**, Suita (JP); **Koji Kurase**, Yao (JP)

(73) Assignee: **Omron Healthcare Co., Ltd.**, Kyoto-Shi (JP)

(*) Notice: Subject to any disclaimer, the term of this patent is extended or adjusted under 35 U.S.C. 154(b) by 0 days.

(21) Appl. No.: **13/227,041**

(22) Filed: **Sep. 7, 2011**

(65) **Prior Publication Data**

US 2012/0036657 A1 Feb. 16, 2012

Related U.S. Application Data

(63) Continuation of application No. PCT/JP2010/051956, filed on Feb. 10, 2010.

(30) **Foreign Application Priority Data**

Mar. 17, 2009 (JP) 2009-064274

(51) **Int. Cl.**
A46B 13/02 (2006.01)

(52) **U.S. Cl.** **15/22.1**

(58) **Field of Classification Search** 15/22.1
See application file for complete search history.

(56) **References Cited**

U.S. PATENT DOCUMENTS

5,214,819	A *	6/1993	Kirchner	15/22.1
5,493,747	A	2/1996	Inakagata et al.	
6,536,068	B1	3/2003	Yang et al.	
2007/0190509	A1	8/2007	Kim	
2008/0060148	A1	3/2008	Pinyayev et al.	
2009/0092955	A1	4/2009	Hwang	
2009/0143914	A1	6/2009	Cook et al.	

FOREIGN PATENT DOCUMENTS

JP	A-7-116027	5/1995
JP	A-2008-532619	8/2008
JP	A-2008-543418	12/2008
WO	WO 01/47392 A1	7/2001
WO	WO 2006/137648 A1	12/2006
WO	WO 2007/097886 A2	8/2007
WO	WO 2007/122491 A2	11/2007
WO	WO 2009/113491 A1	9/2009

OTHER PUBLICATIONS

International Search Report dated Mar. 9, 2010 in International Application PCT/JP2010/051956 (with translation).

* cited by examiner

Primary Examiner — Randall Chin

(74) *Attorney, Agent, or Firm* — Oliff & Berridge, PLC

(57) **ABSTRACT**

An electrical toothbrush includes an electrical toothbrush main body including a drive source of a brush; an orientation sensor configured to detect an orientation of the electrical toothbrush main body; and a controller configured to switch an operation mode of the electrical toothbrush according to a result of comparing an orientation value, which is a value calculated from an output of the orientation sensor, and a threshold value set in advance. A threshold value used for switching determination from an operation mode to an operation mode, and a threshold value used for switching determination from the operation mode to the operation mode are set to different values.
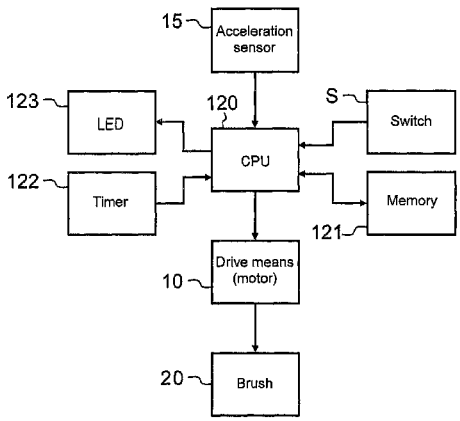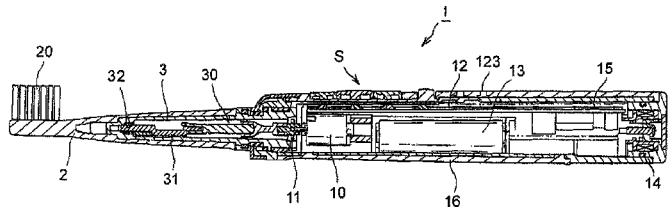
8 Claims, 8 Drawing Sheets