US005776191A

United States Patent [19]

Mazzocco

[11] Patent Number: 5,776,191

[45] Date of Patent: Jul. 7, 1998

[54] **FIXATION SYSTEM FOR INTRAOCULAR LENS STRUCTURES**

[75] Inventor: **Thomas R. Mazzocco**, Granada Hills, Calif.

[73] Assignee: **Staar Surgical Company**, Monrovia, Calif.

[21] Appl. No.: **356,789**

[22] Filed: **Dec. 13, 1994**

Related U.S. Application Data

[63] Continuation of Ser. No. 184,503, Jan. 19, 1994, abandoned, which is a continuation of Ser. No. 400,655, Jul. 22, 1982, abandoned, which is a continuation-in-part of Ser. No. 346,105, Feb. 5, 1982, Pat. No. 4,573,998.

[51] **Int. Cl.**[6] **A61F 2/16**

[52] **U.S. Cl.** **623/6**

[58] **Field of Search** 623/6

[56] **References Cited**

U.S. PATENT DOCUMENTS

3,991,426	11/1976	Flom et al.	623/6
3,992,563	11/1976	Tanaka	623/6
4,053,953	10/1977	Flom et al.	623/6
4,056,855	11/1977	Kelmar	623/6
4,080,709	3/1978	Poler	623/6
4,092,743	6/1978	Kelmar	623/6
4,110,848	9/1978	Jensen	623/6
4,118,808	10/1978	Poler	3/13
4,122,556	10/1978	Poler	623/6
4,153,641	5/1979	Deichert et al.	351/160 H X
4,172,297	10/1979	Schlegel	623/6
4,203,168	5/1980	Rainin et al.	623/6
4,206,518	6/1980	Jardon et al.	623/6
4,214,585	7/1980	Bailey, Jr.	623/4 X
4,244,060	1/1981	Hoffer	623/6
4,251,887	2/1981	Anis	3/13
4,253,199	3/1981	Banto	623/6
4,254,509	3/1981	Tennant	623/6
4,262,370	4/1981	Hartstein	623/6
4,315,337	2/1982	Choyce	3/13 A
4,365,360	12/1982	Ong	3/13 A
4,377,329	3/1983	Poler	3/13
4,402,579	9/1983	Poler	3/13
4,409,691	10/1983	Levy	3/13
4,463,457	8/1984	Kelmon	623/6

FOREIGN PATENT DOCUMENTS

1103399	5/1955	France	3/13
2717706	10/1978	Germany	623/6

OTHER PUBLICATIONS

"The Single Piece Perspex Posterior Chamber Lens" Mar. 1981.

"The Kratz Technique for Cataract Extraction w/Lens Implant" Mar. 1981.

"CILCO Lens Styles" Oct. 1982.

"The Sincoe Posterior Chamber Lens" Feb. 1980.

Primary Examiner—Mary Beth Jones

Attorney, Agent, or Firm—Frank Frisenda, Jr.

[57] **ABSTRACT**

The invention provides an improved system for atraumatic fixation of intraocular lens structures which comprises a deformable, compliant, peripheral frame and a concentrically disposed optical zone portion which, in one embodied form, is resiliently suspended from the frame by a plurality of compliant fibers or webbing. Accordingly, the invention facilitates surgical placement of the intraocular lens structure in the eye without the requirement of sutures, and without iris involvement, thereby providing a safer and more convenient surgical procedure. The unique fixation system may be utilized for placement of intraocular lenses having either a rigid or a deformable optical zone portion in the anterior chamber or posterior chamber of the eye following cataract removal procedures.
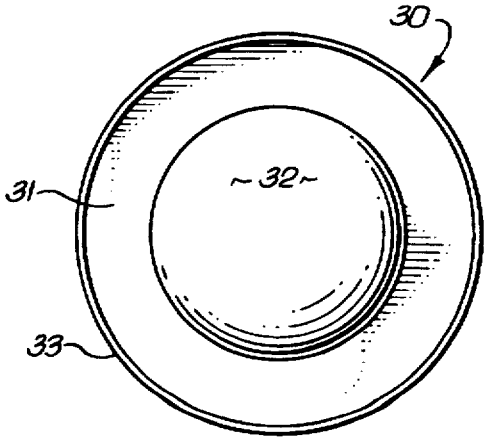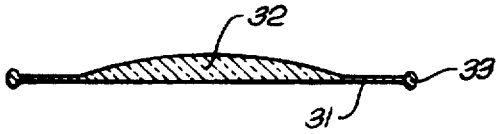
15 Claims, 3 Drawing Sheets