US007776091B2

(12) **United States Patent**
Mastrorio et al.

(10) **Patent No.: US 7,776,091 B2**
(45) **Date of Patent: Aug. 17, 2010**

(54) **ADJUSTABLE POSTERIOR SPINAL COLUMN POSITIONER**

(75) Inventors: **Brooke Mastrorio**, Lakeville, MA (US); **Shinikequa Gibson**, Dorchester, MA (US)

(73) Assignee: **Depuy Spine, Inc.**, Raynham, MA (US)

(*) Notice: Subject to any disclaimer, the term of this patent is extended or adjusted under 35 U.S.C. 154(b) by 535 days.

(21) Appl. No.: **10/881,548**

(22) Filed: **Jun. 30, 2004**

(65) **Prior Publication Data**

US 2006/0004447 A1 Jan. 5, 2006

(51) **Int. Cl.**
A61F 2/44 (2006.01)

(52) **U.S. Cl.** **623/17.15**

(58) **Field of Classification Search** 623/17.11–16; 606/61, 72–73, 246–249, 282
See application file for complete search history.

(56) **References Cited**

U.S. PATENT DOCUMENTS

1,655,922	A *	1/1928	Stoye	606/79
2,100,319	A *	11/1937	Brown et al.	433/122
5,645,599	A	7/1997	Samani	
6,068,630	A	5/2000	Zucherman	
6,126,660	A *	10/2000	Dietz	606/61
6,454,806	B1 *	9/2002	Cohen et al.	623/17.15
6,730,123	B1 *	5/2004	Klopotek	623/6.22
6,953,477	B2 *	10/2005	Berry	623/17.11
2002/0128716	A1 *	9/2002	Cohen et al.	623/17.15
2005/0049590	A1 *	3/2005	Alleyne et al.	606/61
2005/0234555	A1 *	10/2005	Sutton et al.	623/17.15
2005/0256576	A1 *	11/2005	Moskowitz et al.	623/17.12

* cited by examiner

Primary Examiner—Thomas C Barrett
Assistant Examiner—Michael J Araj

(57) **ABSTRACT**

Height-adjustable devices suitable for insertion between posterior spinal processes that allow the surgeon to post-operatively adjust the height of the implant.
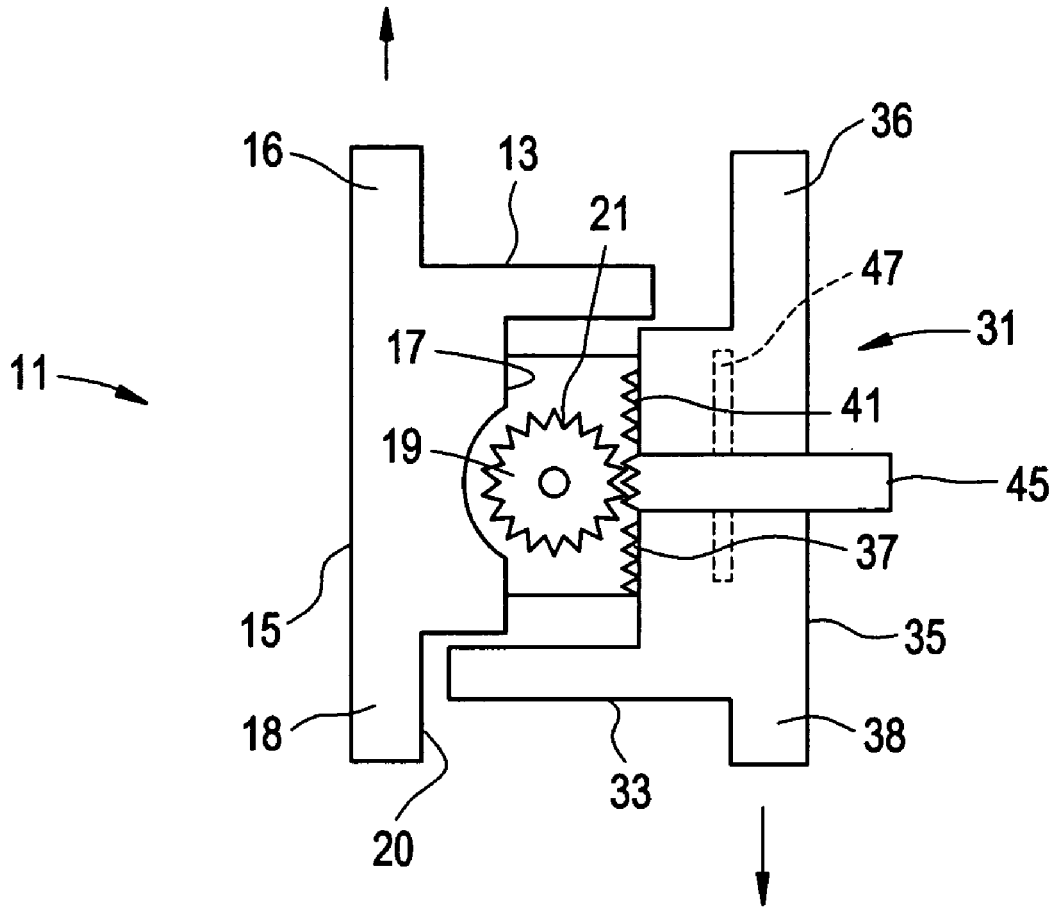
5 Claims, 9 Drawing Sheets