United States Patent [19]

Fehlig

[11] **Patent Number: 5,067,591**

[45] **Date of Patent: Nov. 26, 1991**

[54] **COMBINATION AIR/MANUAL ECONOMY GREASE DISPENSER**

[75] Inventor: **Kenneth L. Fehlig,** Chesterfield, Mo.

[73] Assignee: **Pentair, Incorporated,** St. Paul, Minn.

[21] Appl. No.: **434,855**

[22] Filed: **Nov. 9, 1989**

[51] **Int. Cl.**[5] **F16N 7/30**

[52] **U.S. Cl.** **184/55.1;** 184/29; 184/36; 184/42; 141/21; 141/382; 141/383; 141/387; 222/258; 222/389

[58] **Field of Search** 184/28, 29, 36, 39, 184/41, 42, 45.1, 55.1, 105.1, 105.2, 6.26; 222/258, 261, 262, 263, 389, 380, 385; 141/21, 25–28, 382, 383, 387

[56] **References Cited**

U.S. PATENT DOCUMENTS

1,499,642	7/1924	Craig	141/26
1,559,894	11/1925	Lansing	184/29
1,714,254	12/1924	Zerk	222/259
1,743,968	1/1930	Hatfield	222/263
1,924,068	8/1933	Gleason	184/28
1,945,813	2/1934	Johnson	222/258
2,099,959	11/1937	Johnson	222/258
2,114,509	4/1938	Stoll	222/261
2,242,288	5/1941	Davis	222/263
2,459,010	1/1949	Williams	222/263
2,630,248	3/1953	Hinz	222/258
2,928,574	3/1960	Wagner	222/263
3,829,025	8/1974	McLeod	141/27
4,109,831	8/1978	Culpepper et al.	222/263
4,157,773	6/1979	Schetina et al.	222/263
4,588,002	5/1986	Braddock et al.	141/383
4,676,409	6/1987	Stolz	184/105.1
4,790,456	12/1988	Nakane et al.	222/259

OTHER PUBLICATIONS

Operating Instructions, Parts and Service Series "C", Model 1297.

Lincoln Service Instructions for air grease gun, Form 411840.

Primary Examiner—Ira S. Lazarus

Assistant Examiner—Alan B. Cariaso

Attorney, Agent, or Firm—Rogers, Howell & Haferkamp

[57] **ABSTRACT**

A combined pneumatic and manual grease dispensing system comprises a manually operated fluid pump that draws lubricant from a source and delivers the lubricant at a first fluid pressure, and a pneumatically operated lubricant dispensing gun that receives the lubricant supplied by the manual pump at the first pressure and receives a supply of compressed air from a compressed air source, and dispenses the lubricant received at a second pressure substantially increased from the first pressure at which the lubricant is supplied to the gun.
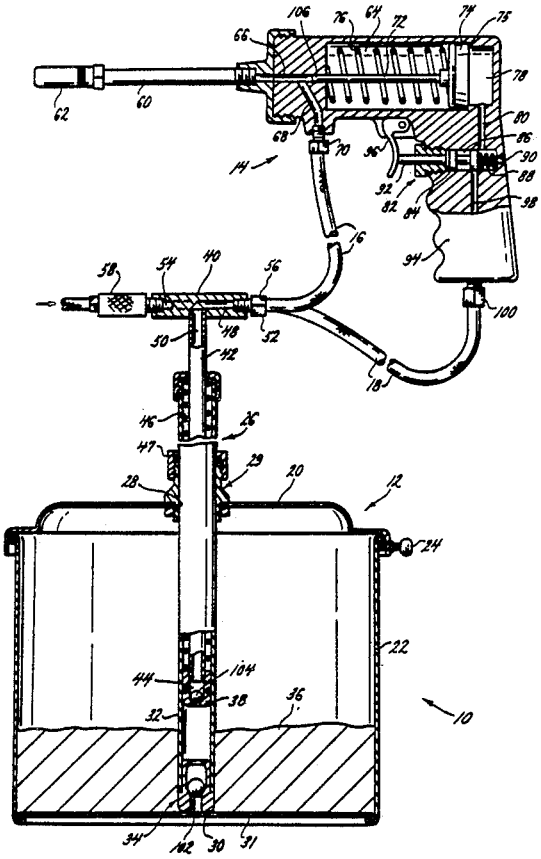
18 Claims, 1 Drawing Sheet