US006750391B2

(12) **United States Patent**
Bower et al.

(10) **Patent No.: US 6,750,391 B2**
(45) **Date of Patent: Jun. 15, 2004**

(54) **ATERNATING CURRENT PHOTOVOLTAIC BUILDING BLOCK**

(75) Inventors: **Ward Issac Bower**, Albuquerque, NM (US); **Michael G. Thomas**, Albuquerque, NM (US); **Douglas S. Ruby**, Albuquerque, NM (US)

(73) Assignee: **Sandia Corporation**, Albuquerque, NM (US)

(*) Notice: Subject to any disclaimer, the term of this patent is extended or adjusted under 35 U.S.C. 154(b) by 0 days.

(21) Appl. No.: **10/280,530**

(22) Filed: **Oct. 25, 2002**

(65) **Prior Publication Data**

US 2003/0111103 A1 Jun. 19, 2003

Related U.S. Application Data

(60) Provisional application No. 60/335,668, filed on Oct. 25, 2001.

(51) **Int. Cl.**[7] **H01L 31/048**; H01L 31/05

(52) **U.S. Cl.** **136/244**; 136/291; 136/293; 136/251; 323/906; 363/60; 363/178

(58) **Field of Search** 136/244, 291, 136/293, 251; 323/906; 363/60, 178

(56) **References Cited**

U.S. PATENT DOCUMENTS

5,180,442	A		1/1993	Elias
5,702,963	A		12/1997	Vu et al.
5,742,495	A		4/1998	Barone
5,951,785	A		9/1999	Uchihashi et al.
6,046,400	A		4/2000	Drummer
6,111,189	A		8/2000	Garvison et al.
6,143,582	A		11/2000	Vu et al.
6,180,868	B1		1/2001	Yoshino et al.
6,201,180	B1		3/2001	Meyer et al.
6,219,623	B1		4/2001	Wills
6,285,572	B1		9/2001	Onizuka et al.
6,326,764	B1	*	12/2001	Virtudes 320/101
6,646,196	B2	*	11/2003	Fronek et al. 136/251
2002/0038666	A1		4/2002	Toyomura et al.
2002/0050290	A1		5/2002	Kobayashi
2002/0179140	A1		12/2002	Toyomura
2002/0186020	A1		12/2002	Kondo et al.

FOREIGN PATENT DOCUMENTS

JP	2002-330556 A	*	11/2002
JP	2003-115602 A	*	4/2003
WO	WO-00/12839 A1	*	3/2000

OTHER PUBLICATIONS

Derwent Abstract No. 2003–006170, Jan. 2003.*

Russell, M., et al., Sunshine300 AC Module, A PVMaT Annual Report by Ascension Technology, *NREL/SR–520–23432*, Golden CO (Aug. 1997).

Stern, M., et al., "Development of a Low–Cost Integrated 30–kW–AC Solar Tracking Subarray for Grid–Connected PV Power System Applications," A PVMaT Final Technical Report by Utility Power Group, *NREL/SR–520–24759*, Jun. 1998).

(List continued on next page.)

Primary Examiner—Alan Diamond
(74) *Attorney, Agent, or Firm*—Jeffrey D. Myers; Robert D. Watson

(57) **ABSTRACT**

A modular apparatus for and method of alternating current photovoltaic power generation comprising via a photovoltaic module, generating power in the form of direct current; and converting direct current to alternating current and exporting power via one or more power conversion and transfer units attached to the module, each unit comprising a unitary housing extending a length or width of the module, which housing comprises: contact means for receiving direct current from the module; one or more direct current-to-alternating current inverters; an alternating current bus; and contact means for receiving alternating current from the one or more inverters.
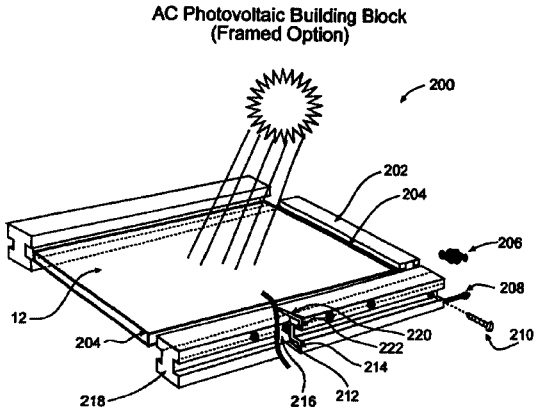
18 Claims, 16 Drawing Sheets