US006147791A

United States Patent [19]

Sheridon

[11] **Patent Number: 6,147,791**

[45] **Date of Patent: Nov. 14, 2000**

[54] **GYRICON DISPLAYS UTILIZING ROTATING ELEMENTS AND MAGNETIC LATCHING**

[75] Inventor: **Nicholas K. Sheridon**, Los Altos, Calif.

[73] Assignee: **Xerox Corporation**, Stamford, Conn.

[21] Appl. No.: **09/199,403**

[22] Filed: **Nov. 25, 1998**

[51] **Int. Cl.**[7] **G02B 26/00**

[52] **U.S. Cl.** **359/296**; 345/10; 345/107

[58] **Field of Search** 359/296; 345/10, 345/107

[56] **References Cited**

U.S. PATENT DOCUMENTS

3,036,388	5/1962	Tate	35/66
3,406,363	10/1968	Tate	335/302
3,615,993	10/1971	French	156/155
3,846,161	11/1974	Marks	117/93
3,982,334	9/1976	Tate	35/66
4,117,194	9/1978	Barbe et al.	428/374
4,126,854	11/1978	Sheridon	340/373
4,139,841	2/1979	Roberts	340/373
4,197,063	4/1980	Davidson	425/8
4,209,481	6/1980	Kashiro et al.	264/24
4,232,084	11/1980	Tate	428/309
4,256,677	3/1981	Lee	264/8
4,261,653	4/1981	Goodrich	350/362
4,810,431	3/1989	Leidner	264/15
5,262,098	11/1993	Crowley et al.	264/8
5,290,066	3/1994	Mody	281/15.1
5,344,594	9/1994	Sheridon	264/4.1
5,354,521	10/1994	Goodman	264/24
5,411,398	5/1995	Nakanishi et al.	434/409
5,468,275	11/1995	Lin et al.	65/497
5,474,590	12/1995	Lin	65/202
5,515,075	5/1996	Nakagiri et al.	345/111
5,526,016	6/1996	Nakagiri et al.	345/111
5,569,432	10/1996	Maciejewski	264/439
5,582,841	12/1996	Watton et al.	425/8
5,627,562	5/1997	Skodlar	345/111
5,647,883	7/1997	Houpt et al.	65/494
5,708,525	1/1998	Sheridon	359/296
5,717,514	2/1998	Sheridon	359/296
5,717,515	2/1998	Sheridon	359/296
5,737,115	4/1998	Mackinlay et al.	359/296
5,739,801	4/1998	Sheridon	345/84
5,751,268	5/1998	Sheridon	345/107
5,754,332	5/1998	Crowley	359/296
5,760,761	6/1998	Sheridon	345/107
5,767,826	6/1998	Sheridon et al.	345/84

OTHER PUBLICATIONS

Patent Abstracts of Japan, vol. 1998, No. 13, Nov. 30, 1998 (Nov. 30, 1998) & JP 10 214048 A (Brother Ind Ltd.), Aug. 11, 1998 (Aug. 11, 1998) *abstract*.

Lawrence L. Lee, A Magnetic–Particles Display, *Proceeding of the S.I.D.*, vol. 16/3, Third Quarter 1975, pp. 177–184.

Lawrence L. Lee, 9.5: Matrix–Addressed Magnetic Particles Displays, *S.I.D. 77 Digest*, First Edition, Apr. 1977, pp. 112–113.

M. Saitoh, T. Mori, R. Ishikawa and H. Tamura, A Newly Developed Electrical Twisting Ball Display, *Proceedings of the S.I.D.*, vol. 23/4, 1982, pp. 249–253.

Nicholas K. Sheridon, U. S. Serial No. 08/889,762, A Method for Fabricating Polychromal Segmented Balls for a Twisting Ball Display, Filed Jul. 10, 1997.

Nicholas K. Sheridon, U. S. Serial No. 08/890,830, An Apparatus for Fabricating Polychromal Segmented Balls for a Twisting Ball Display, Filed Jul. 10, 1997.

Nicholas K. Sheridon, U. S. Serial No. 08/962,976, A Method of Manufacturing a Twisting Cylinder Display Using Multiple Chromatic Values, Filed Oct. 30, 1997.

Primary Examiner—Georgia Epps
Assistant Examiner—Evelyn A. Lester
Attorney, Agent, or Firm—Nola Mae McBain

[57] **ABSTRACT**

A sheet material for use in a gyricon display in which a rotatable element, which has a portion which is capable of being permanently magnetized may be oriented to experience an attractive force between itself and a soft magnetic material pad. The attractive force between the element and the pad serve to latch the element in place and prevent unwanted display changes from taking place. The element may be constructed to be either cylindrically or spherically shaped. The element and the soft magnetic material pads may be arranged to provide multiple latching states as desired.
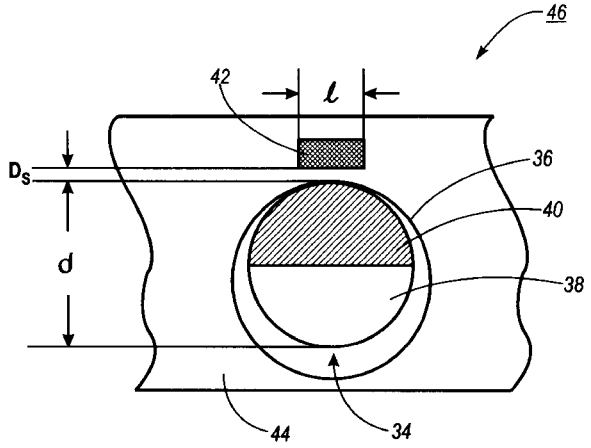
31 Claims, 35 Drawing Sheets