US008444691B2

(12) **United States Patent**
Vassallo et al.

(10) **Patent No.: US 8,444,691 B2**
(45) **Date of Patent: May 21, 2013**

(54) **NASAL VALVE TREATMENT METHOD AND APPARATUS**

(75) Inventors: **Charles Vassallo**, Oxford, CT (US); **Susan L. Critzer**, Dellwood, MN (US)

(73) Assignee: **Medtronic Xomed, Inc.**, Jacksonville, FL (US)

(*) Notice: Subject to any disclaimer, the term of this patent is extended or adjusted under 35 U.S.C. 154(b) by 0 days.

(21) Appl. No.: **13/085,161**

(22) Filed: **Apr. 12, 2011**

(65) **Prior Publication Data**

US 2011/0190884 A1 Aug. 4, 2011

Related U.S. Application Data

(62) Division of application No. 11/144,354, filed on Jun. 3, 2005, now Pat. No. 7,947,076.

(51) **Int. Cl.**
A61F 2/18 (2006.01)
A61B 17/34 (2006.01)

(52) **U.S. Cl.** **623/10**; 606/185

(58) **Field of Classification Search** 600/7–8; 606/116–117, 185, 199; 623/10, 14.12; 604/272
See application file for complete search history.

(56) **References Cited**

U.S. PATENT DOCUMENTS

261,501	A	7/1882	Vandermark	
3,395,709	A	8/1968	Rubin	
4,055,378	A	10/1977	Feneberg	
4,105,035	A	8/1978	Rella	
4,147,164	A	4/1979	Behney	
D263,747	S	4/1982	Jaramillo et al.	
4,700,692	A *	10/1987	Baumgartner	600/7
4,753,636	A	6/1988	Free	
4,778,466	A	10/1988	Brotman	
4,787,903	A	11/1988	Grendahl	
4,898,461	A	2/1990	Portney	
4,900,304	A *	2/1990	Fujioka et al.	604/60
4,938,234	A	7/1990	Capriotti	
4,941,874	A *	7/1990	Sandow et al.	604/60
4,950,234	A *	8/1990	Fujioka et al.	604/60
4,995,714	A	2/1991	Cohen	
4,995,715	A	2/1991	Cohen	
5,030,232	A	7/1991	Pham	
5,076,684	A	12/1991	Simpson	
5,084,057	A	1/1992	Green et al.	
5,094,233	A	3/1992	Brennan	
5,098,439	A *	3/1992	Hill et al.	606/107

(Continued)

FOREIGN PATENT DOCUMENTS

WO	WO 2005/082452	A1	9/2005
WO	WO 2006/072571	A1	7/2006

OTHER PUBLICATIONS

Cole, P., "Biophysics of Nasal Airflow: A Review," *American Journal of Rhinology*, vol. 14, No. 4, pp. 245-249 (Jul.-Aug. 2000).

(Continued)

Primary Examiner — Andrew Iwamaye
(74) *Attorney, Agent, or Firm* — Merchant & Gould P.C.

(57) **ABSTRACT**

A method and apparatus for treating a nasal valve condition including surgically forming an access path to create a pocket on a side of the patient's nose. The pocket is positioned between a soft tissue layer and opposing surfaces of upper and lower cartilages of the nose. The pocket spans a junction between the upper and lower cartilages. An implant is placed through the access path into the pocket with a length oriented to span the junction. A delivery system for placement of the implant includes a surgical tool for forming the access path and for delivering the implant into the access path.
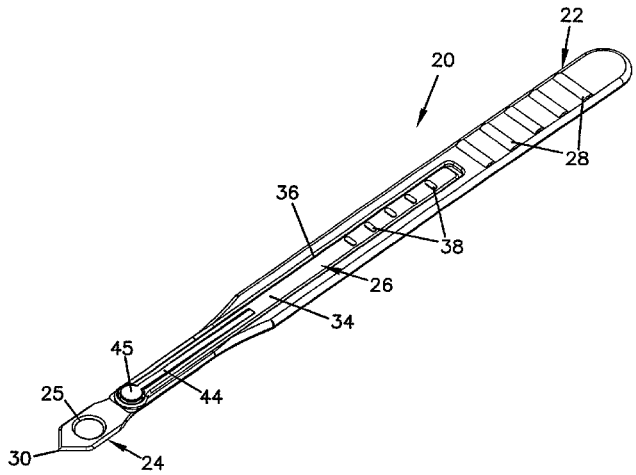
3 Claims, 8 Drawing Sheets