US009638291B2

(12) **United States Patent**
Janson et al.

(10) **Patent No.: US 9,638,291 B2**
(45) **Date of Patent: May 2, 2017**

(54) **MULTI-SPEED TRANSMISSION**

(71) Applicant: **FORD GLOBAL TECHNOLOGIES, LLC**, Dearborn, MI (US)

(72) Inventors: **David Allen Janson**, Plymouth, MI (US); **Donald Edward Hoffman**, Canton, MI (US)

(73) Assignee: **Ford Global Technologies, LLC**, Dearborn, MI (US)

(*) Notice: Subject to any disclaimer, the term of this patent is extended or adjusted under 35 U.S.C. 154(b) by 0 days.

(21) Appl. No.: **14/801,286**

(22) Filed: **Jul. 16, 2015**

(65) **Prior Publication Data**

US 2015/0323046 A1 Nov. 12, 2015

Related U.S. Application Data

(62) Division of application No. 13/922,282, filed on Jun. 20, 2013, now Pat. No. 9,109,669.

(51) **Int. Cl.**

F16H 3/44	(2006.01)
F16H 3/66	(2006.01)
F16H 3/62	(2006.01)

(52) **U.S. Cl.**

CPC ***F16H 3/666*** (2013.01); ***F16H 3/62*** (2013.01); ***F16H 3/66*** (2013.01); *F16H 2200/006* (2013.01); *F16H 2200/0086* (2013.01); *F16H 2200/201* (2013.01); *F16H 2200/2046* (2013.01)

(58) **Field of Classification Search**

None

See application file for complete search history.

(56) **References Cited**

U.S. PATENT DOCUMENTS

6,860,831	B2	3/2005	Ziemer	
6,910,985	B2 *	6/2005	Ishimaru	F16H 3/66 475/271
6,935,985	B2 *	8/2005	Ishimaru	F16H 3/663 475/275
7,052,431	B2 *	5/2006	Taguchi	F16H 3/663 475/284
7,235,032	B2	6/2007	Thomas	
7,264,085	B2 *	9/2007	Ikeda	F16H 3/663 184/6.12
7,294,089	B2	11/2007	Thomas	
7,628,723	B2	12/2009	Bauknecht	
7,651,432	B2 *	1/2010	Bauknecht	F16H 3/663 475/284

(Continued)

OTHER PUBLICATIONS

Benford, Howard L. and Leising, Maurice B., The Lever Analogy: A New Tool in Transmission Analysis, Chrysler Corp., SAE 810102, 1982.

Primary Examiner — Dirk Wright

(74) *Attorney, Agent, or Firm* — James Dottavio; Brooks Kushman P.C.

(57) **ABSTRACT**

A family of transmission gearing arrangements provides a plurality of forward speed ratios and one or more reverse speed ratios by selective engagement of shift elements in various combinations. Three simple planetary gear sets are located on the input axis. One of the simple planetary gear sets may have either a split-ring arrangement in which two ring gears are provided with one carrier and one sun gear, or a split-sun arrangement in which two sun gears are provided with one carrier and one ring gear.
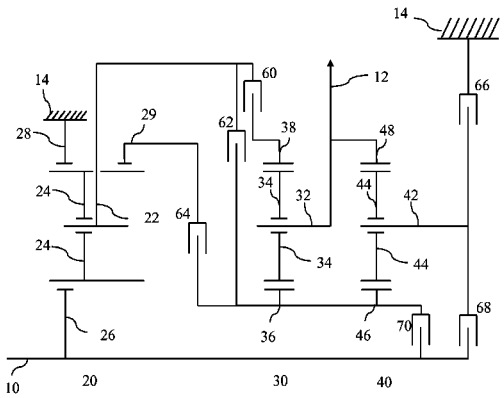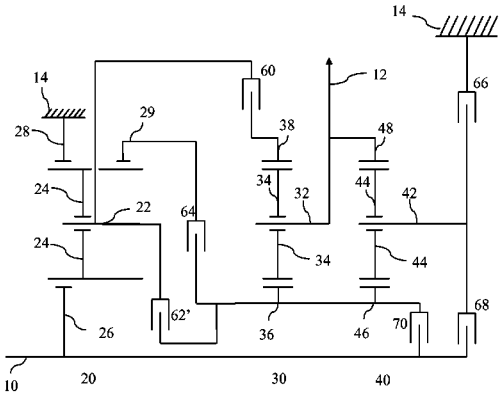
7 Claims, 4 Drawing Sheets