US009636491B1

(12) **United States Patent**
O'Brien, III

(10) **Patent No.: US 9,636,491 B1**
(45) **Date of Patent: May 2, 2017**

(54) **DISPOSABLE NEEDLE CARTRIDGES HAVING ABSORBING CONTAMINANT BARRIERS**

(71) Applicant: **Thomas Michael O'Brien, III**, Dallas, TX (US)

(72) Inventor: **Thomas Michael O'Brien, III**, Dallas, TX (US)

(73) Assignee: **Eclipse Aesthetics, LLC**, Dallas, TX (US)

(*) Notice: Subject to any disclaimer, the term of this patent is extended or adjusted under 35 U.S.C. 154(b) by 0 days.

(21) Appl. No.: **15/176,223**

(22) Filed: **Jun. 8, 2016**

(51) **Int. Cl.**

A61M 5/00	(2006.01)
A61M 37/00	(2006.01)
A61M 5/32	(2006.01)
A61M 5/31	(2006.01)

(52) **U.S. Cl.**
CPC ***A61M 37/0015*** (2013.01); ***A61M 5/3297*** (2013.01); *A61M 2005/3117* (2013.01); *A61M 2037/0023* (2013.01)

(58) **Field of Classification Search**
CPC A61M 37/0015; A61M 5/3297; A61M 2037/0023; A61M 2005/3117
USPC 604/173, 117
See application file for complete search history.

(56) **References Cited**

U.S. PATENT DOCUMENTS

2,578,812 A * 12/1951 Kollsman A61M 5/28 604/117
2,588,623 A 3/1952 Eliscu et al.
2,840,076 A 6/1958 Robbins
4,159,659 A 7/1979 Nightingale
4,204,438 A 5/1980 Binaris et al.
4,582,060 A 4/1986 Bailey
(Continued)

FOREIGN PATENT DOCUMENTS

CA 2340248 A1 2/2000
CA 2696209 A1 2/2009
(Continued)

OTHER PUBLICATIONS

Dermapen, Retrieved on Aug. 29, 2016 from http://dermapen.com/dermapen/, 2 pages.
(Continued)

Primary Examiner — Edelmira Bosques
(74) *Attorney, Agent, or Firm* — Vincent J. Allen; James H. Ortega; Carstens & Cahoon, LLP

(57) **ABSTRACT**

Disclosed herein are unique needle cartridges for use with transdermal microneedling devices, and prevent backflow of liquid(s) from the skin of a patient. One embodiment may comprise a base portion and a sleeve coupled to the base portion. The needle cartridge may also comprise a needle unit disposed at the distal end of the base portion and within the sleeve, wherein the needle unit comprises at least one needle ending therefrom. Also, the needle cartridge comprises a drive shaft disposed through the base portion and coupled to the needle unit, and configured to be driven reciprocally along a longitudinal axis of the base portion and thereby move the needle unit reciprocally such that the needles of the needle unit extend beyond and retract within the sleeve. Such needle cartridges would include an absorbing barrier disposed within the base portion to prevent the backflow of liquid(s) from the needle unit by absorbing such liquid(s).
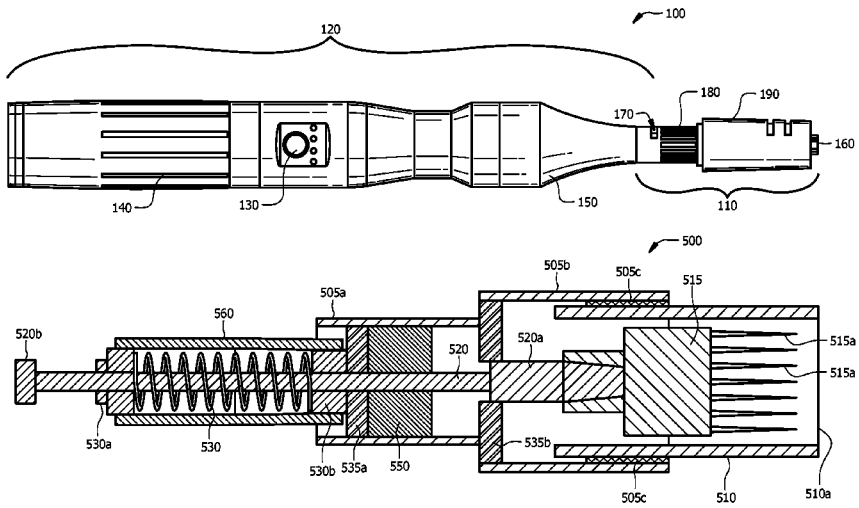
51 Claims, 8 Drawing Sheets