US007131591B1

(12) **United States Patent**
**Herrod et al.**

(10) **Patent No.: US 7,131,591 B1**
(45) **Date of Patent: Nov. 7, 2006**

(54) **LINK COST MINIMIZATION FOR PORTABLE WIRELESS TERMINAL CONNECTABLE TO THE INTERNET**

(75) Inventors: **Allan Herrod**, Farmingville, NY (US); **Mehul Patel**, Commack, NY (US); **Jerome Swartz**, Old Field, NY (US)

(73) Assignee: **Symbol Technologies, Inc.**, Holtsville, NY (US)

( * ) Notice: Subject to any disclaimer, the term of this patent is extended or adjusted under 35 U.S.C. 154(b) by 367 days.

(21) Appl. No.: **09/589,514**

(22) Filed: **Jun. 8, 2000**

**Related U.S. Application Data**

(62) Division of application No. 08/827,263, filed on Mar. 28, 1997, now Pat. No. 6,747,692.

(51) **Int. Cl.**
***G06K 7/10*** (2006.01)

(52) **U.S. Cl.** ..... **235/472.02**

(58) **Field of Classification Search** .....
235/462.01–462.49, 454, 375–386, 472.01–472.03; 345/700, 751; 358/400, 407, 700, 751; 455/405, 455/553.1, 450–456.6
See application file for complete search history.

(56) **References Cited**

U.S. PATENT DOCUMENTS

5,221,832 A * 6/1993 Collins et al. ..... 235/462.15
5,327,144 A * 7/1994 Stilp et al. ..... 342/387
5,664,126 A * 9/1997 Hirakawa et al. ..... 345/751
5,754,227 A 5/1998 Fukuoka ..... 348/232
5,804,803 A * 9/1998 Cragun et al. ..... 235/375
5,808,672 A 9/1998 Wakabayashi et al. ..... 348/220
5,815,657 A * 9/1998 Williams et al. ..... 235/380
5,845,084 A 12/1998 Cordell et al.
5,854,985 A * 12/1998 Sainton et al. ..... 455/553.1
5,869,840 A 2/1999 Helton ..... 235/472.01
5,898,600 A 4/1999 Isashi ..... 708/105
5,905,248 A * 5/1999 Russell et al. ..... 235/462.15
6,014,701 A 1/2000 Chaddha
6,039,258 A 3/2000 Durbin et al. ..... 235/472.01
6,053,413 A * 4/2000 Swift et al. ..... 235/462.43
6,088,127 A * 7/2000 Pieterse ..... 358/407
6,144,848 A * 11/2000 Walsh et al. ..... 455/419
6,185,413 B1 * 2/2001 Mueller et al. ..... 455/405
6,279,059 B1 * 8/2001 Ludtke et al. ..... 710/62

FOREIGN PATENT DOCUMENTS

JP 07095312 A * 4/1995
JP 2001154965 A * 6/2001

* cited by examiner

*Primary Examiner*—Jared J. Fureman
*Assistant Examiner*—Jamara A. Franklin
(74) *Attorney, Agent, or Firm*—Kirschstein,et al

(57) **ABSTRACT**

A method of reducing the cost of transmitting data from a portable or mobile hand-held data terminal to a remote data receiving station over a wireless communications network by determining the associated data transmission cost for each communication link between the terminal and the station; and selecting a data transmission link from the terminal to the station such that data transmission cost is minimized.
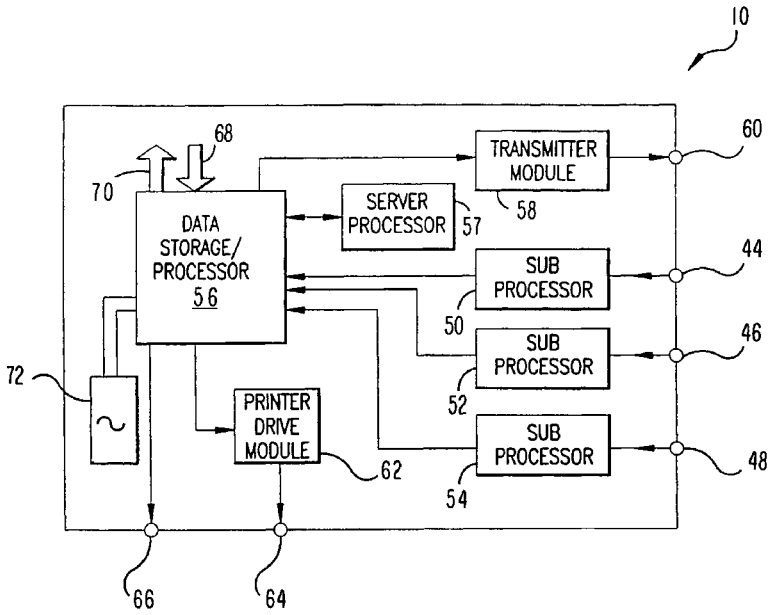
**3 Claims, 8 Drawing Sheets**