March 31, 1964 A. A. CAPUTI 3,126,891

LOOSE-LEAF BINDER CONTAINER FOR PENCILS AND THE LIKE

Filed May 31, 1962

FIG. 1

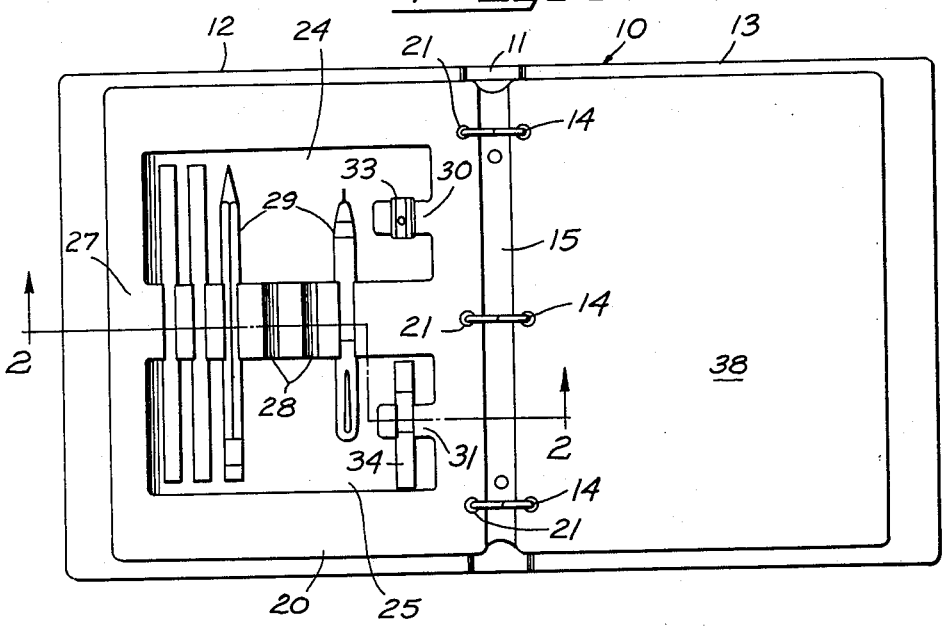

FIG. 2

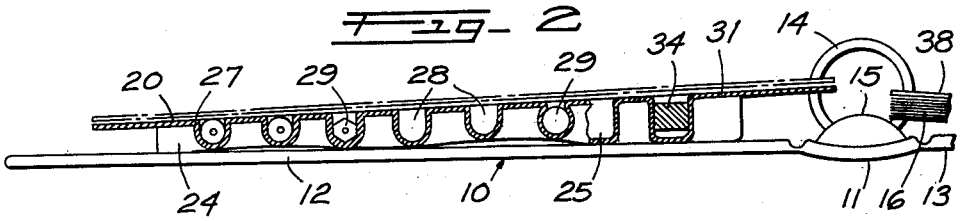

FIG. 3

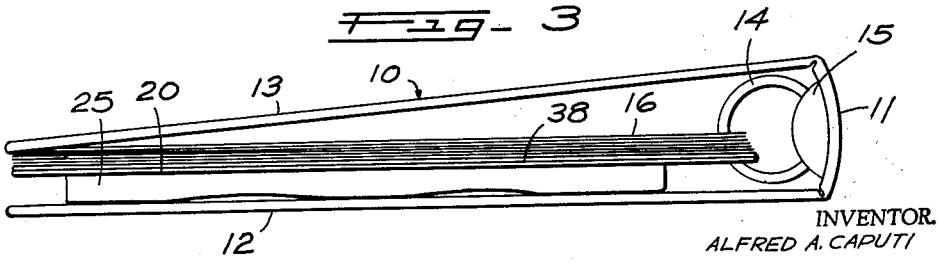

INVENTOR.
ALFRED A. CAPUTI

BY

ATTORNEYS