United States Patent [19]

Breger

[11] **4,418,991**

[45] **Dec. 6, 1983**

[54] **PRESBYOPIC CONTACT LENS**

[76] Inventor: **Joseph L. Breger,** 511 Ravine Dr., Highland Park, Ill. 60035

[21] Appl. No.: **157,399**

[22] Filed: **Jun. 9, 1980**

Related U.S. Application Data

[63] Continuation-in-part of Ser. No. 78,462, Sep. 24, 1979, abandoned.

[51] **Int. Cl.**[3] **G02C 7/04;** G02C 7/06

[52] **U.S. Cl.** **351/161**

[58] **Field of Search** ..... 351/160 R, 160 H, 161; 51/124 L

[56] **References Cited**

U.S. PATENT DOCUMENTS

Re. 25,286	11/1962	De Carle	351/161
3,187,338	6/1965	Neefe	351/160 R
3,227,507	1/1966	Feinbloom	351/160 R
3,344,692	10/1967	Volk	351/160 R
3,482,906	12/1969	Volk	351/160 R
3,535,825	10/1970	Volk	351/160 X
3,772,832	11/1973	Smith	351/160 R
3,950,082	4/1976	Volk	351/161 X
4,149,801	4/1979	Volk	356/124
4,195,919	4/1980	Shelton	351/167 X

OTHER PUBLICATIONS

Defazio et al., "Inspection of Back Surface Aspheric Contact Lenses", *Am. J. of Optometry*, vol. 56, No. 8, Aug. 1979, pp. 471–479.

Goldberg, J. B., "Eccentricity Values of Corneal Lenses", *Optometric Weekly*, vol. 67, No. 14, Apr. 1976.

Primary Examiner—John K. Corbin
Assistant Examiner—Scott J. Sugarman
Attorney, Agent, or Firm—Fitch, Even, Tabin & Flannery

[57] **ABSTRACT**

A contact lens to correct presbyopia provides a distance correction at the center, increasing diopter adds away from the center for close and intermediate viewing and a good physical fit. The lens has a generally spherical anterior surface and a posterior surface with an annular fitting region for good physical fit and an optical region having a central portion providing a distance correction and a paracentral portion providing a gradient of diopter adds for close and intermediate viewing
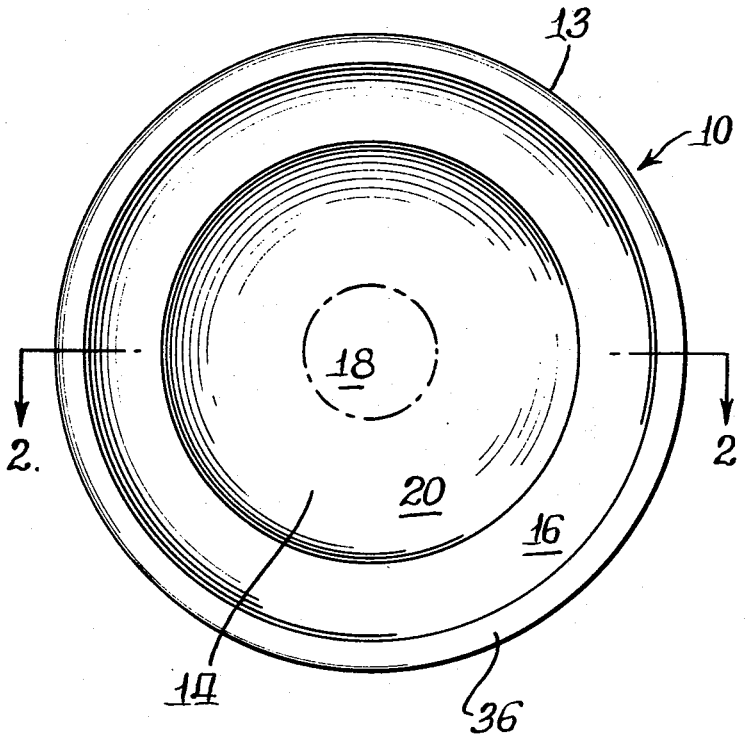
6 Claims, 5 Drawing Figures