US007211191B2

(12) **United States Patent**
Coelho et al.

(10) **Patent No.: US 7,211,191 B2**
(45) **Date of Patent: May 1, 2007**

(54) **BLOOD COMPONENT SEPARATION METHOD AND APPARATUS**

(75) Inventors: **Philip H. Coelho**, Sacramento, CA (US); **Eric Sommer**, El Dorado Hills, CA (US); **Richard Klosinski**, Carmichael, CA (US); **Jim Hobbs**, Carmichael, CA (US)

(73) Assignee: **ThermoGenesis Corp.**, Rancho Cordova, CA (US)

(*) Notice: Subject to any disclaimer, the term of this patent is extended or adjusted under 35 U.S.C. 154(b) by 355 days.

(21) Appl. No.: **10/957,095**

(22) Filed: **Sep. 30, 2004**

(65) **Prior Publication Data**

US 2006/0068369 A1 Mar. 30, 2006

(51) **Int. Cl.**

B01D 24/32	(2006.01)
B04B 5/02	(2006.01)
A61M 37/00	(2006.01)
B04B 5/00	(2006.01)

(52) **U.S. Cl.** **210/360.1**; 210/781; 210/782; 210/787; 494/16; 494/20; 494/21; 494/37; 604/6.15; 604/403; 604/408; 604/410; 604/500

(58) **Field of Classification Search** 210/360.1; 494/16; 604/6.15

See application file for complete search history.

(56) **References Cited**

U.S. PATENT DOCUMENTS

4,447,220	A *	5/1984	Eberle	494/26
5,484,428	A *	1/1996	Drainville et al.	604/319
6,471,855	B1 *	10/2002	Odak et al.	210/143
6,652,475	B1 *	11/2003	Sahines et al.	604/6.01

* cited by examiner

Primary Examiner—Krishnan S. Menon
(74) *Attorney, Agent, or Firm*—Bernhard Kreten; Audrey A. Millemann; Weintraub Genshlea Chediak Sproule

(57) **ABSTRACT**

An apparatus and method for collecting whole blood and then separating it into components for subsequent use or storage. A self-contained bag set is used to collect the sample, which may then be placed into a device adapted to fit into a centrifuge for separation of components. Each component is then sequentially extracted according to density, with a sensor present in the device to control the operation of valves directing the collection of each component. Each component may then be separated into its own storage container.
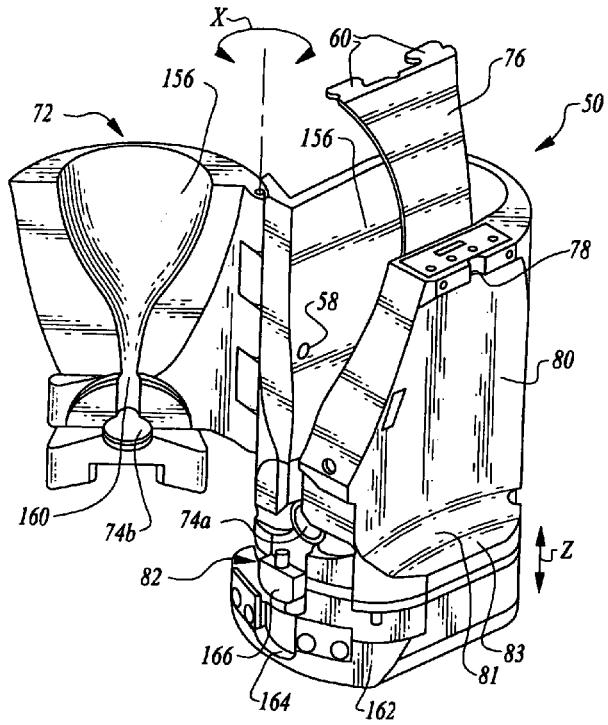
3 Claims, 17 Drawing Sheets