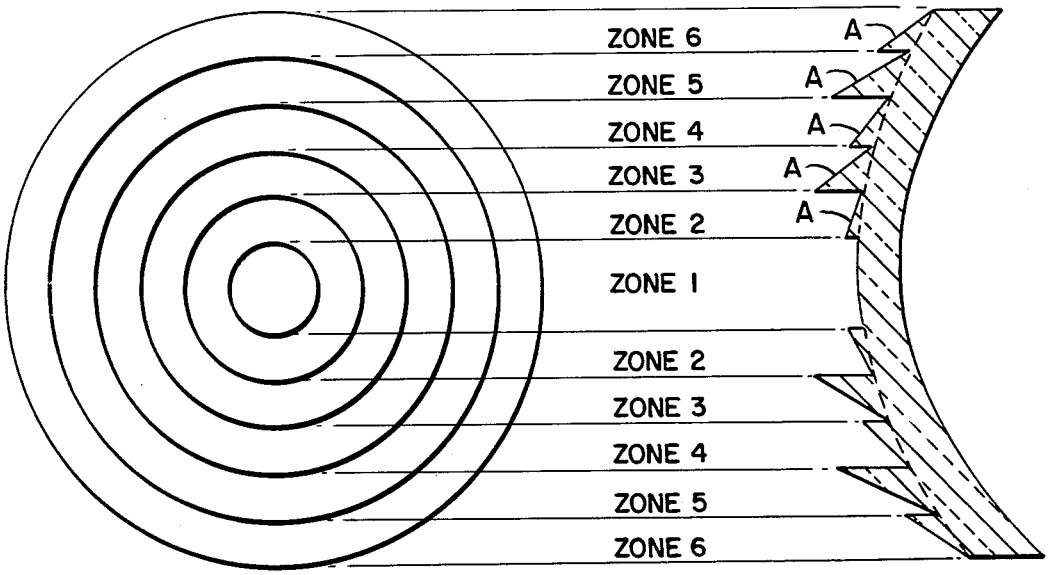


PRIOR ART

*FIG. 1*

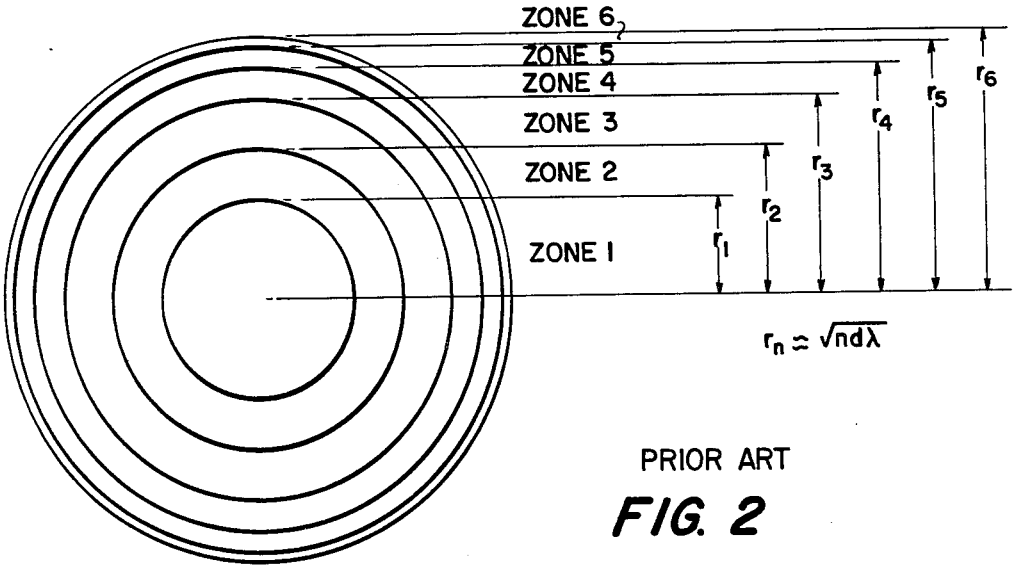


PRIOR ART

*FIG. 2*