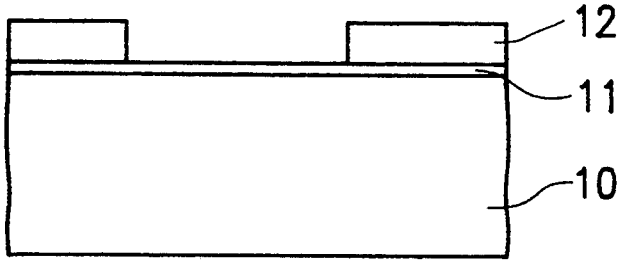

FIG. 1a
PRIOR ART

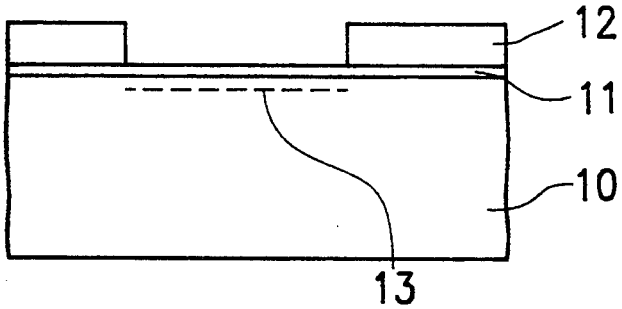

FIG. 1b
PRIOR ART

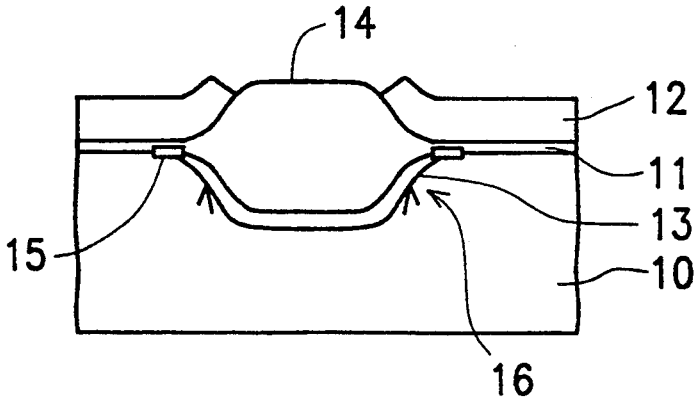

FIG. 1c
PRIOR ART