US005494590A

United States Patent [19]

Smith et al.

[11] **Patent Number: 5,494,590**

[45] **Date of Patent: Feb. 27, 1996**

[54] **METHOD OF USING ANTICOAGULANT SOLUTION IN BLOOD SEPARATION**

[75] Inventors: **Ward C. Smith**, Toms River, N.J.; **Richard J. Carroll**, Syracuse, N.Y.

[73] Assignee: **Becton Dickinson**, Franklin Lakes, N.J.

[21] Appl. No.: **897,305**

[22] Filed: **Jun. 11, 1992**

[51] **Int. Cl.**[6] **B01D 21/26**

[52] **U.S. Cl.** **210/782**; 210/787; 210/789; 435/2; 436/177

[58] **Field of Search** 210/782, 787, 210/789, 513, 514, 515, 516; 422/101, 102; 436/177; 435/2; 424/533

[56] **References Cited**

U.S. PATENT DOCUMENTS

3,847,738	11/1974	Brake et al.	435/2
3,852,194	12/1974	Zine, Jr.	210/516
4,147,628	4/1979	Bennett et al.	210/516
4,190,535	2/1980	Luderer et al.	210/516
4,356,172	10/1982	Nakao et al.	435/2
4,457,782	7/1984	Honda et al.	210/516
4,500,309	2/1985	Diederich et al.	210/646
4,534,798	8/1985	Honda et al.	210/510.1
4,640,785	2/1987	Carroll et al.	210/782
4,695,460	9/1987	Holme	435/2
4,867,887	9/1989	Smith	210/782
4,925,665	5/1990	Murphy	435/2
4,957,638	9/1990	Smith	210/782
4,961,928	10/1990	Holme et al.	435/2
5,248,506	9/1993	Holme et al.	435/2

FOREIGN PATENT DOCUMENTS

63-015161	1/1988	Japan .
62-276460	5/1988	Japan .

OTHER PUBLICATIONS

Holodniy, M., et al., "Inhibition of Human Immunodeficiency Virus Gene Amplication by Heparin", Journal of Clinical Microbiology, 29, 676–679, (Apr. 1991).

Walter, H., et al., "Differential Effect of pH on the Density and Volume of Rat Reticulocytes and Erythrocytes", Cell Biophysics, 16, 139–148, (1990).

Reinhart, W. H., et al., "Influence of blood withdrawal and anticoagulant on clotting activity, hematologic data, and certain rheologic measurements", J. Lab. Clin. Med., 115, 98–103 (1990).

Letwin, B. W., et al., "An Improved Clonal Excess Assay Using Flow Cytometry and B–Cell Gating", Blood, 75, 1178–1185, (Mar. 1990).

Miller, C., et al., "Effects of Storage Conditions on Lymphocyte Phenotypes From Healthy and Diseased Persons", Journal of Clinical Laboratory Analysis, 3, 296–300, (1989).

Lombarts, A., et al. "Recognition and Prevention of Pseudothrombocytopenia and Concomitant Pseudoleukocytosis", A.J.C.P., 89, 634–639, (1988).

Patrick, C., et al., "Collection and Preparation of Hematopoietic Cells for Cell Marker Analysis", Laboratory Medicine, 15, 659–665, (Oct. 1984).

Primary Examiner—John Kim

Attorney, Agent, or Firm—Hoffmann & Baron

[57] **ABSTRACT**

An anticoagulant solution of sodium citrate for use in blood chemistry-related techniques and apparatus is disclosed. The anticoagulant solution should include an effective concentration of sodium citrate sufficient for preventing the coagulation of a sample of blood employed in the technique or added to the apparatus. The sodium citrate-based anticoagulant solution should have a pH ranging from above 6.0 to about 8.5 and a sodium citrate concentration preferably ranging from about 0.05M to about 0.2M.
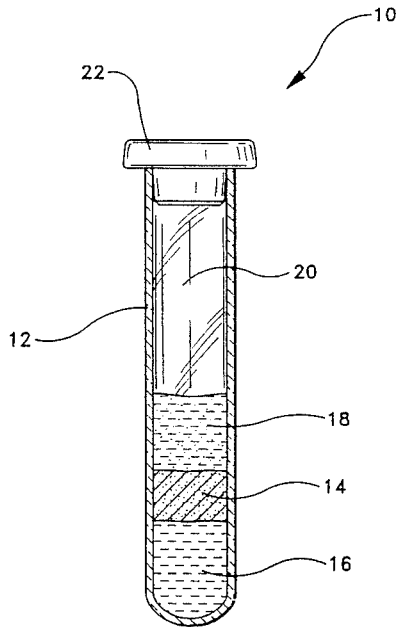
10 Claims, 1 Drawing Sheet