April 27, 1937. B. SPERO 2,078,590

TELESCOPIC SPECTACLES

Filed April 10, 1935

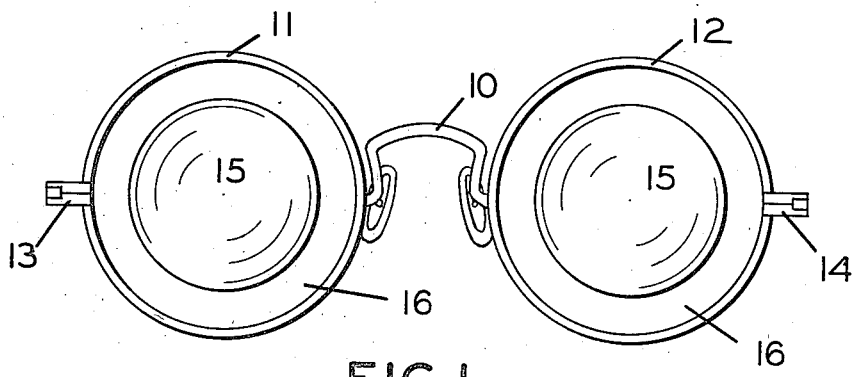

FIG. 1

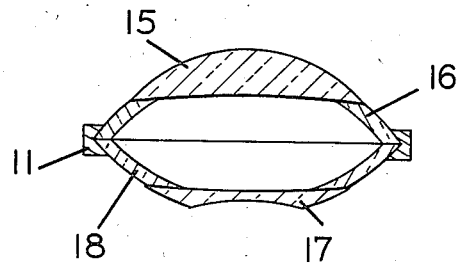

FIG. 2

BERNARD SPERO
INVENTOR

BY G. A. Ellestad
ATTORNEY