United States Patent [19]

Kern

[11] **Patent Number: 4,676,790**

[45] **Date of Patent: Jun. 30, 1987**

[54] **METHOD OF MANUFACTURE AND IMPLANTATION OF CORNEAL INLAYS**

[76] Inventor: **Seymour P. Kern,** 22 Timbergate, Irvine, Calif. 92714

[21] Appl. No.: **779,808**

[22] Filed: **Sep. 25, 1985**

[51] **Int. Cl.**[4] **A61F 2/14;** A61F 17/32; A61B 17/36

[52] **U.S. Cl.** ..... **623/5;** 128/1 R; 128/303.1; 128/305

[58] **Field of Search** ..... 623/5, 6, 4, 1; 128/1 R, 305, 395, 303.1; 351/160 H

[56] **References Cited**

U.S. PATENT DOCUMENTS

3,562,820	2/1971	Braun	623/1 X
4,077,411	3/1978	Ward	128/305 X
4,346,482	8/1982	Tennant et al.	128/1 R X
4,461,294	7/1984	Baron	128/303.1
4,563,779	1/1986	Kelman	623/5
4,581,030	4/1986	Bruns et al.	623/5

OTHER PUBLICATIONS

Corneal Surgery—Advanced Techniques in Optithalmic Microsurgery—vol. Two, by Louis J. Girard (Book) The C. V. Mosby Co., St. Louis, Toronto, London, 1981, p. 171 (FIG. 6-26).

Primary Examiner—Ronald L. Frinks

[57] **ABSTRACT**

A process for making a corneal inlay and implanting the inlay in the human eye, the latter comprising the steps of preparing a lens blank; shaping the blank by laser milling or the like; preparing a recess in the cornea of the patient, the recess being adapted to receiving the shaped inlay whereby the exterior surface of the inlay lies flush with the Bowman's layer; and bonding the inlay to the recess by suturing, laser welding, gluing or other appropriate means.
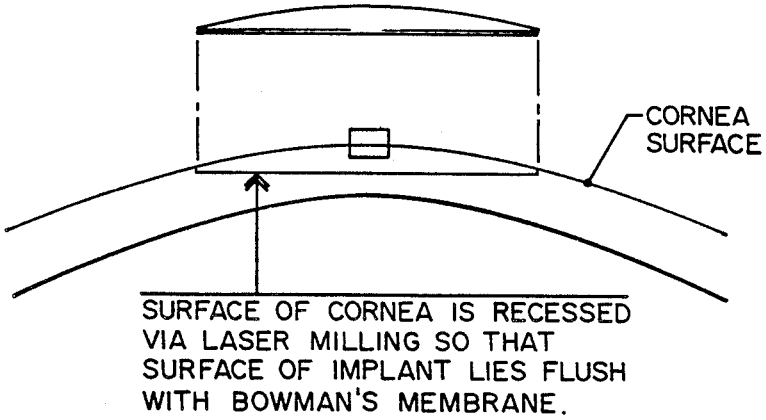
3 Claims, 8 Drawing Figures