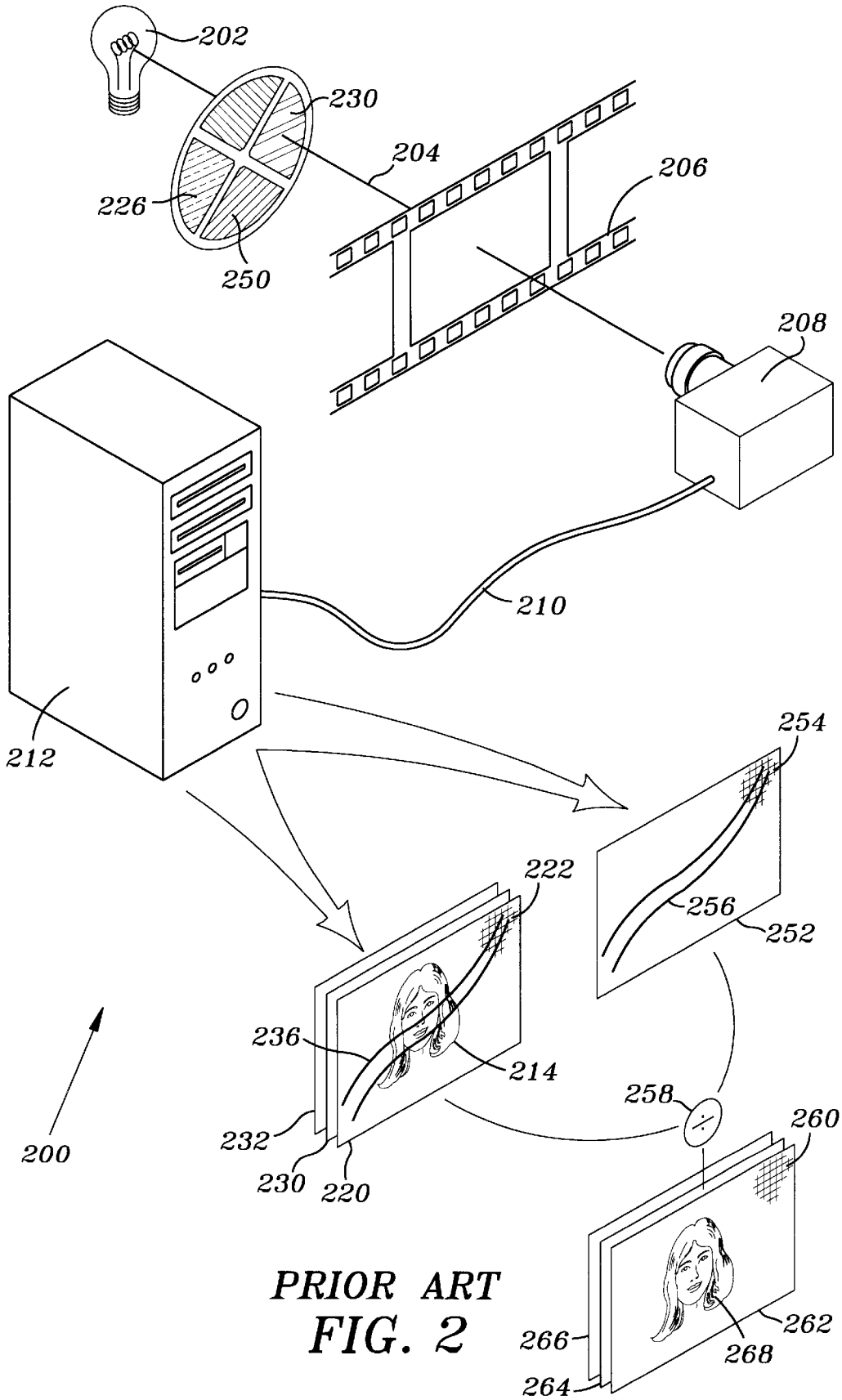

PRIOR ART
FIG. 2