March 6, 1945. G. P. NISSEN 2,370,990

TUMBLING DEVICE

Filed June 4, 1941 2 Sheets-Sheet 1

Fig. 1

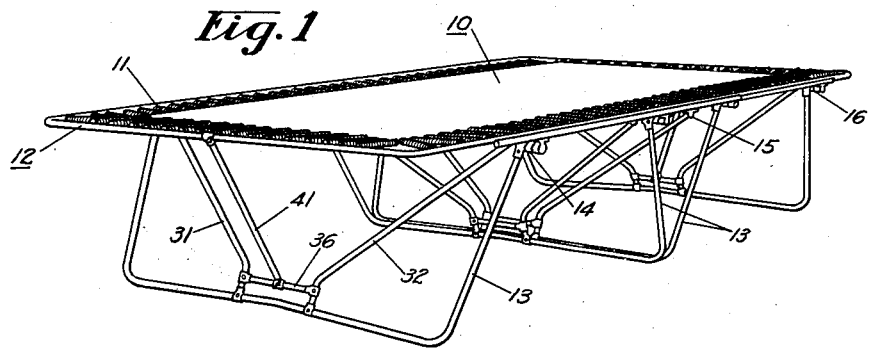

Fig. 5

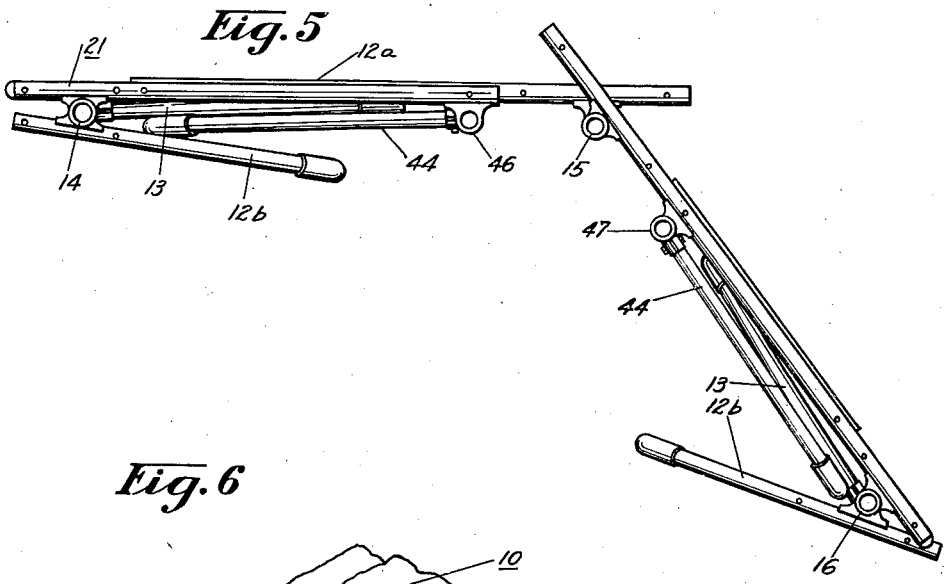

Fig. 6

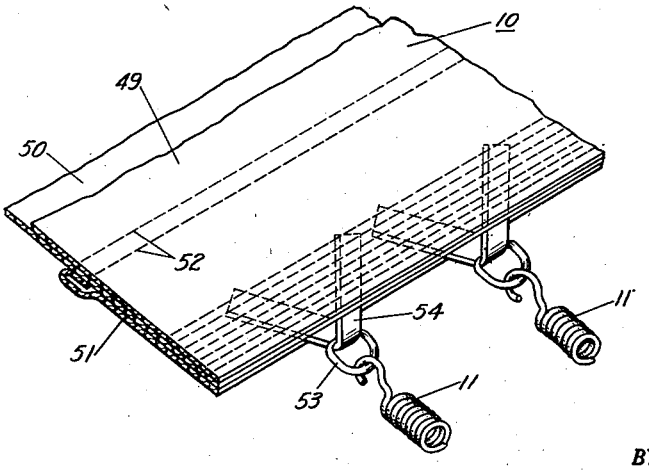

INVENTOR.
GEORGE P. NISSEN
BY
Flournoy Corey.
ATTORNEY.