US005769890A

United States Patent [19]

McDonald

[11] Patent Number: 5,769,890

[45] Date of Patent: Jun. 23, 1998

[54] **PLACEMENT OF SECOND ARTIFICIAL LENS IN EYE, TO CORRECT FOR OPTICAL DEFECTS OF FIRST ARTIFICIAL LENS IN EYE**

[75] Inventor: **Henry H. McDonald**, 525 E. Cordova St., #100, Pasadena, Calif. 91101

[73] Assignees: **Henry H. McDonald**; **William H. Haefliger**, Pasadena, Calif.; a part interest

[21] Appl. No.: **786,368**

[22] Filed: **Jan. 16, 1997**

[51] **Int. Cl.**[6] **A61F 2/16**

[52] **U.S. Cl.** **623/6**; 606/107

[58] **Field of Search** 623/6; 606/107

[56] **References Cited**

U.S. PATENT DOCUMENTS

4,573,998	3/1986	Mazzocco	623/6
4,585,456	4/1986	Blackmore	623/6
4,605,409	8/1986	Kelman	623/6
4,731,078	3/1988	Stoy et al.	623/6
4,759,761	7/1988	Portnoy	623/6
4,769,035	9/1988	Kelman	623/6
4,813,957	3/1989	McDonald	623/6
4,833,890	5/1989	Kelman	623/6
4,840,627	6/1989	Blumenthal	623/6
4,888,014	12/1989	Nguyen	623/6
4,907,586	3/1990	Bille et al.	606/5
4,932,970	6/1990	Portney	623/6
4,932,971	6/1990	Kelman	623/6
4,950,288	8/1990	Kelman	623/6
4,955,902	9/1990	Kelman	623/6
4,957,505	9/1990	McDonald	623/6
4,959,070	9/1990	McDonald	623/6
5,019,091	5/1991	Knight et al.	623/5
5,030,231	7/1991	Portney	623/6
5,044,743	9/1991	Ting	351/163
5,098,444	3/1992	Feaster	623/6
5,203,789	4/1993	McDonald	623/6
5,203,790	4/1993	McDonald	623/6
5,258,025	11/1993	Fedorov et al.	623/6
5,292,324	3/1994	McDonald	606/107
5,480,428	1/1996	Fedorov et al.	623/6

FOREIGN PATENT DOCUMENTS

1477109	3/1992	European Pat. Off.	623/6
2666735	3/1992	France	623/6
034325	7/1958	Germany	623/6
4129668	5/1992	Germany	623/6
1168238	7/1985	U.S.S.R.	106/107
WO8902252	3/1989	WIPO .	
WO911359	9/1991	WIPO .	
9220302	11/1992	WIPO	623/6
9303776	3/1993	WIPO	623/6

Primary Examiner—Mary Beth Jones
Attorney, Agent, or Firm—William W. Haefliger

[57] **ABSTRACT**

The method of providing corrected vision in an eye wherein a first artificial lens has been previously placed in the lens capsule of the eye, which includes providing a second artificial lens to have opposed surfaces, and inserting the second lens in an eye chamber forward of the capsule so that one of the opposed surfaces faces toward the first lens, the second lens characterized as correcting for optical defects associated with the first lens.
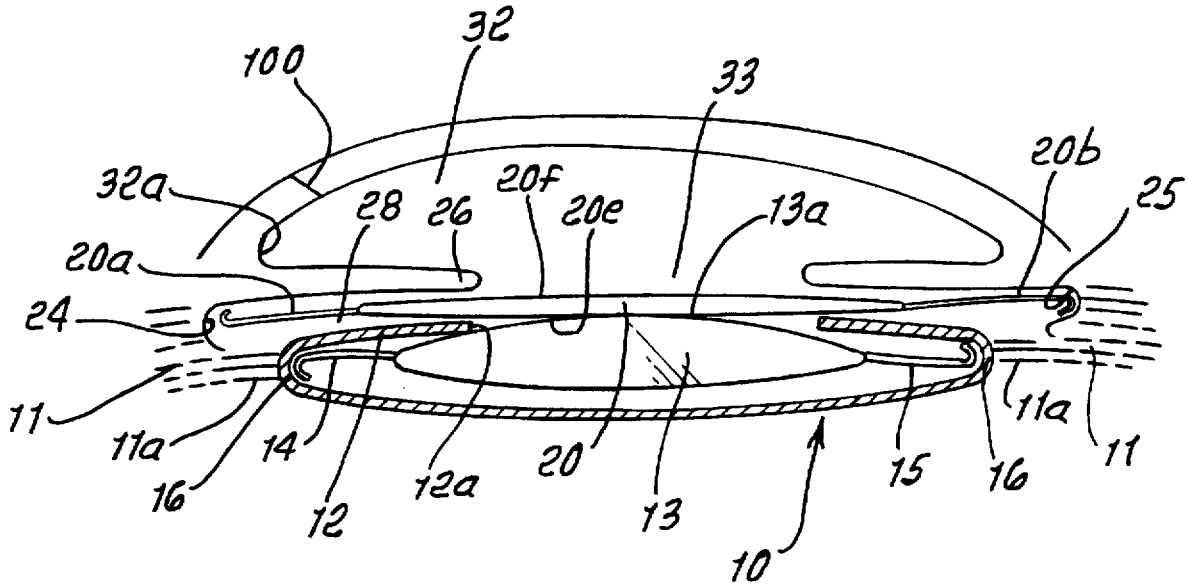
11 Claims, 3 Drawing Sheets