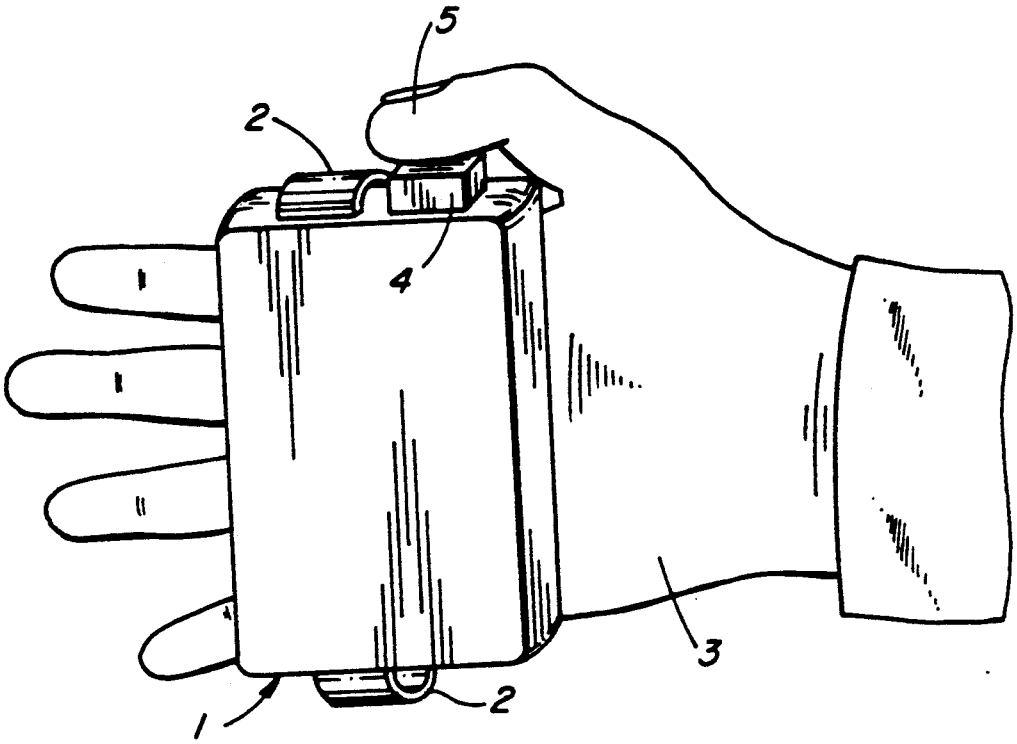
5
2
4
3
2
1

FIG. 1

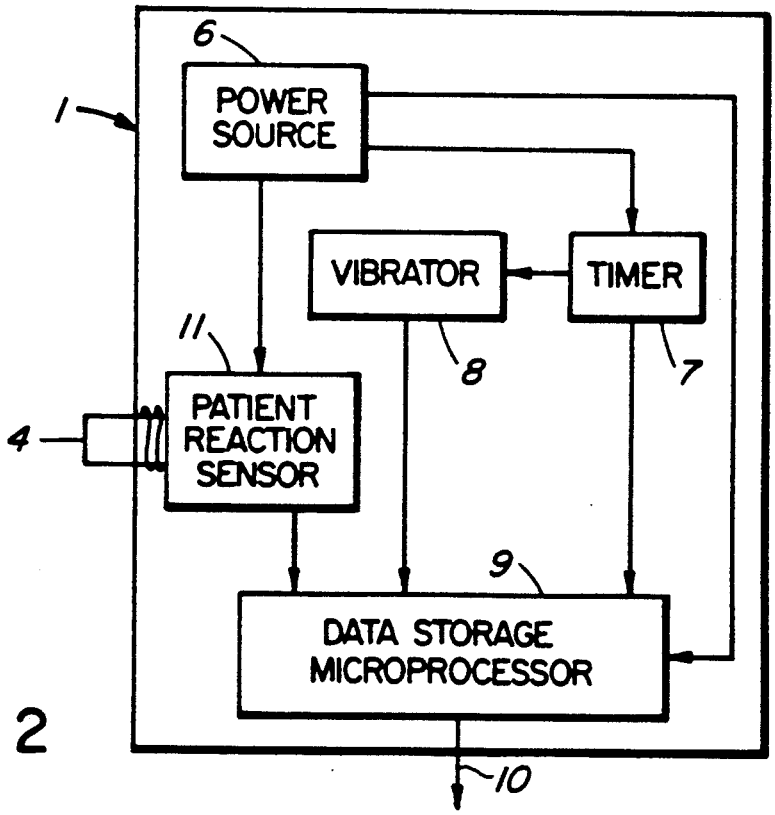
6
POWER SOURCE
1
VIBRATOR
TIMER
11
8
7
PATIENT REACTION SENSOR
4
9
DATA STORAGE MICROPROCESSOR
10

FIG. 2