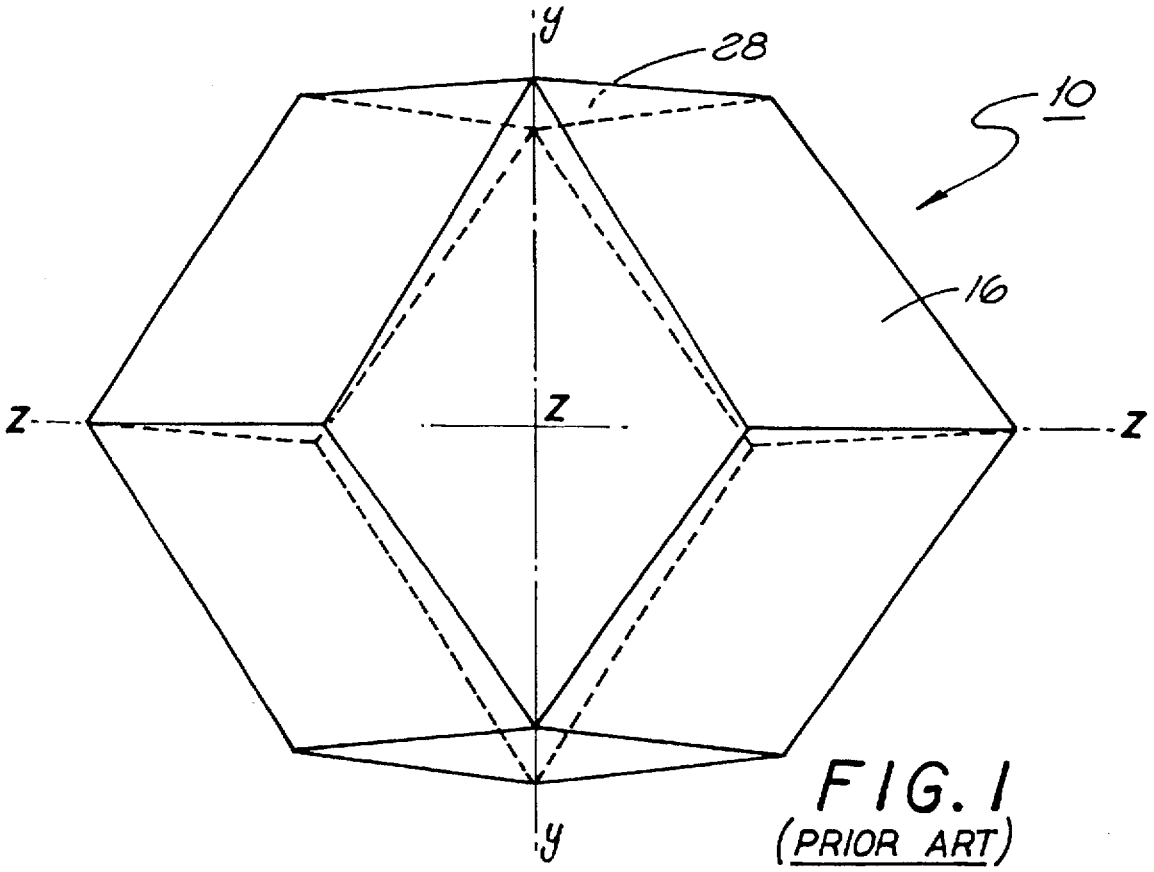

FIG. 1
(PRIOR ART)
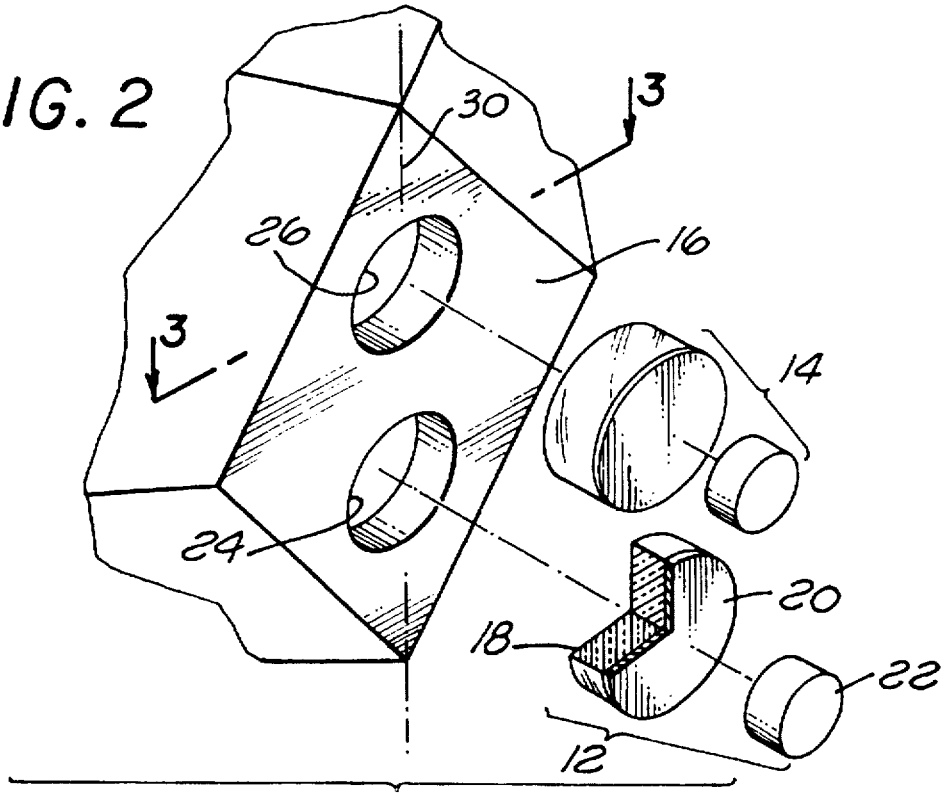
FIG. 2