Fig. 1.

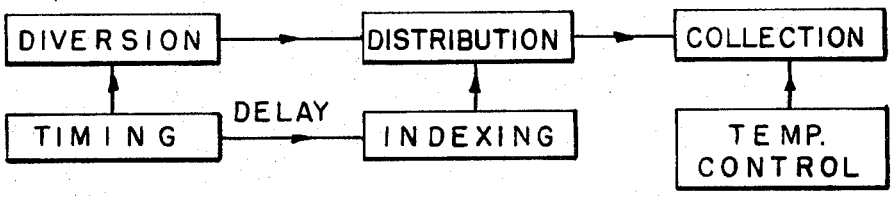

Fig. 2.

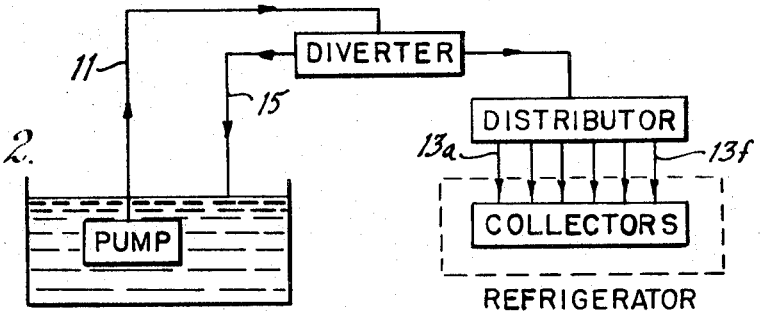

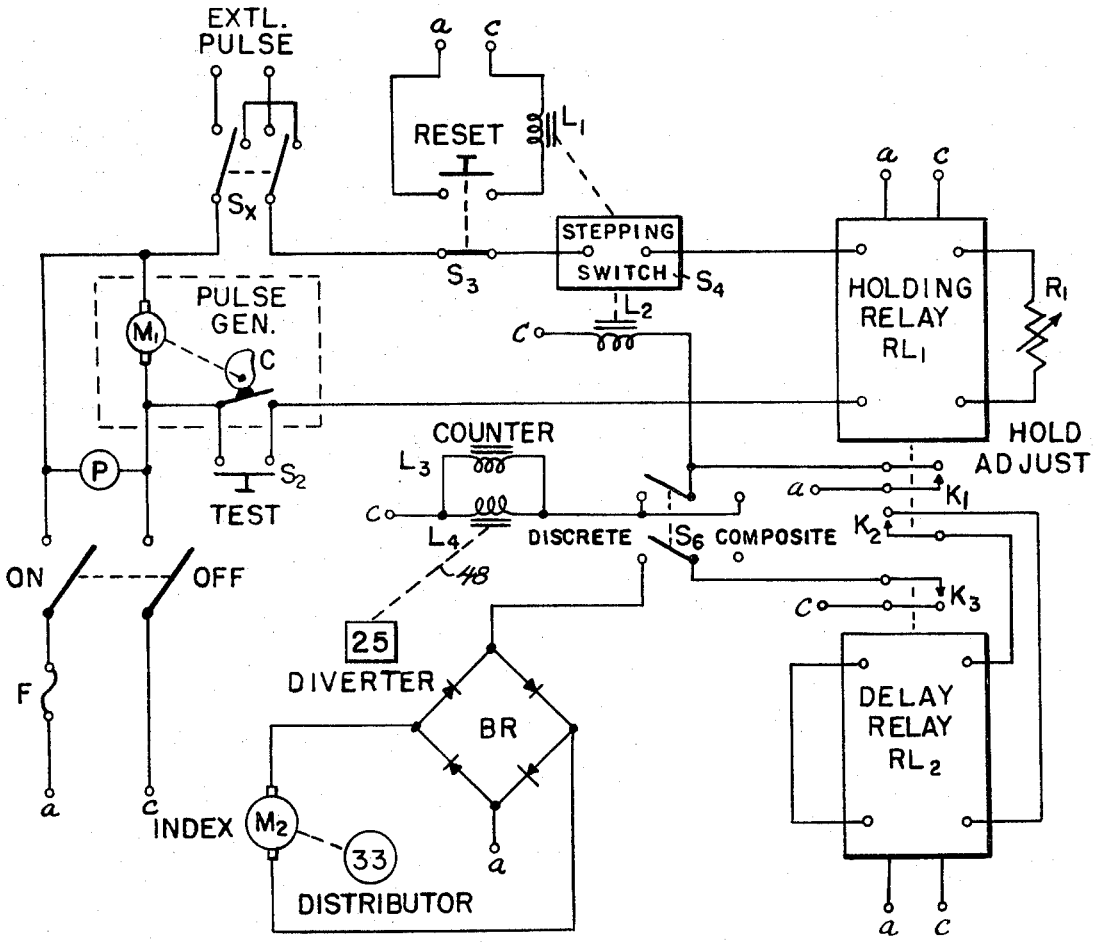

Fig. 7.

INVENTOR.
ROBERT M. BLECHMAN
BY McCluney & Millman
ATTORNEYS.