US006749090B2

(12) **United States Patent**
Bailey

(10) **Patent No.: US 6,749,090 B2**
(45) **Date of Patent: Jun. 15, 2004**

(54) **DUAL BLADDER SPORTS HYDRATION SYSTEM**

(75) Inventor: **Randall B. Bailey**, Sun Prairie, WI (US)

(73) Assignee: **Trek Bicycle Corporation**, Waterloo, WI (US)

(*) Notice: Subject to any disclaimer, the term of this patent is extended or adjusted under 35 U.S.C. 154(b) by 0 days.

(21) Appl. No.: **10/237,849**

(22) Filed: **Sep. 9, 2002**

(65) **Prior Publication Data**

US 2003/0075573 A1 Apr. 24, 2003

Related U.S. Application Data

(60) Provisional application No. 60/340,931, filed on Oct. 22, 2001.

(51) **Int. Cl.**[7] **B67D 05/64**

(52) **U.S. Cl.** **222/175**; 222/107; 222/145.5

(58) **Field of Search** 222/175, 107, 222/145.5; 604/6.1; 251/9, 10, 207

(56) **References Cited**

U.S. PATENT DOCUMENTS

486,698	A	*	11/1892	Ketchum	423/38
1,964,362	A		6/1934	Nassif	
3,197,071	A		7/1965	Kuster	
3,272,387	A		9/1966	Katz et al.	
3,411,534	A	*	11/1968	Rose	137/595
3,876,112	A		4/1975	Kramer	
4,061,142	A	*	12/1977	Tuttle	604/34
4,425,113	A	*	1/1984	Bilstad	604/6.04
4,526,298	A		7/1985	Boxer et al.	
4,739,905	A		4/1988	Nelson	
4,753,371	A	*	6/1988	Michielin et al.	222/144.5
4,856,995	A		8/1989	Wagner	
5,188,266	A		2/1993	Loulias	
5,332,157	A		7/1994	Proctor	
5,405,030	A		4/1995	Frazier	
5,433,350	A		7/1995	Graubart	
5,753,289	A		5/1998	Ness	
5,794,819	A		8/1998	Smith	
5,816,457	A		10/1998	Croft	
5,865,797	A	*	2/1999	Zeeman	604/80
5,911,406	A	*	6/1999	Winefordner et al.	251/339
5,921,440	A		7/1999	Maines	
5,947,335	A		9/1999	Milio et al.	
5,967,308	A	*	10/1999	Bowen	206/219
5,967,315	A		10/1999	Langtry, II	
6,010,034	A		1/2000	Walthers	
6,039,305	A		3/2000	Hoskins et al.	
6,062,435	A		5/2000	Hess, III	
6,112,952	A		9/2000	Hess, III et al.	
6,164,822	A		12/2000	Beer	
6,179,146	B1		1/2001	Betras	
6,283,344	B1		9/2001	Bradley	
6,589,197	B1	*	7/2003	Doi et al.	604/6.1

FOREIGN PATENT DOCUMENTS

EP	1 106 191 A1	*	6/2001	A61M/1/28
WO	WO 00/10626	*	3/2000	A61M/1/28

* cited by examiner

Primary Examiner—Gene Mancene
Assistant Examiner—Melvin Cartagena
(74) *Attorney, Agent, or Firm*—David C. Brezina; Barnes & Thornburg

(57) **ABSTRACT**

An improved sports hydration system uses a plurality of bladders and tube branches communicating through tube branch controlling valve to a single feed tube.
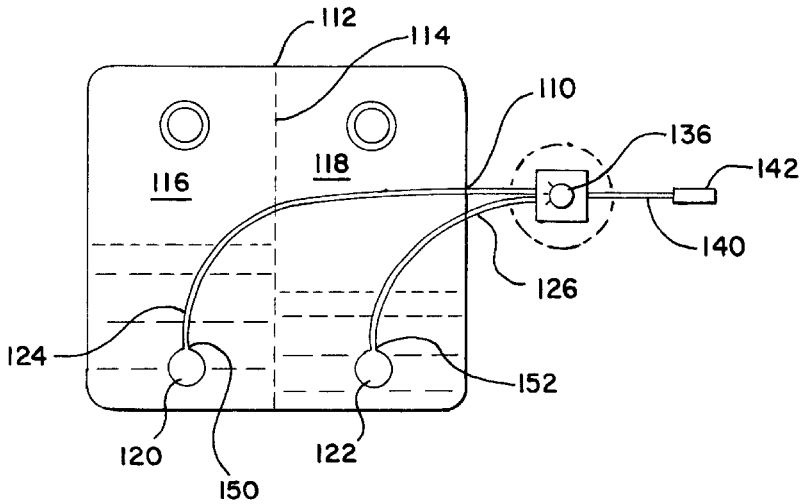
19 Claims, 3 Drawing Sheets