US007437990B2

(12) **United States Patent**
Duch

(10) **Patent No.: US 7,437,990 B2**
(45) **Date of Patent: Oct. 21, 2008**

(54) **ALL-IN-ONE DISPOSABLE CONTAINER FOR MAKING COFFEE, TEA AND OTHER MIXED BEVERAGES**

(76) Inventor: **Enrique Gámez Duch**, 18 Calle 0-41, Zona 1, P.O. Box 332, Guatemala City (GT)

(*) Notice: Subject to any disclaimer, the term of this patent is extended or adjusted under 35 U.S.C. 154(b) by 460 days.

(21) Appl. No.: **10/978,679**

(22) Filed: **Nov. 2, 2004**

(65) **Prior Publication Data**

US 2005/0252382 A1 Nov. 17, 2005

Related U.S. Application Data

(60) Provisional application No. 60/570,950, filed on May 14, 2004.

(51) **Int. Cl.**
A47J 31/00 (2006.01)
B65D 81/34 (2006.01)
B65B 29/02 (2006.01)

(52) **U.S. Cl.** **99/297**; 99/319; 99/323; 99/323.3

(58) **Field of Classification Search** ..... 99/297, 99/287, 295, 302 R, 317, 318, 319, 323, 323.3; 426/112, 115
See application file for complete search history.

(56) **References Cited**

U.S. PATENT DOCUMENTS

1,346,485	A	*	7/1920	De Arrigunaga	99/297
1,699,303	A	*	1/1929	Mennicke et al.	99/297
2,749,834	A	*	6/1956	Hiscock	99/287
2,766,796	A		10/1956	Tupper	
2,899,310	A		8/1959	Dale	
3,657,993	A	*	4/1972	Close	99/297
3,796,813	A		3/1974	Kurland	
3,935,318	A		1/1976	Mihailide	
3,985,069	A	*	10/1976	Cavalluzzi	99/295
4,619,830	A		10/1986	Napier	
4,699,794	A		10/1987	Brice et al.	
4,806,369	A		2/1989	Thompson	
5,180,079	A		1/1993	Jeng	
5,441,752	A		8/1995	Sandin	
D381,866	S		8/1997	St-Gelais	
5,664,480	A		9/1997	DiFilippo	
5,755,149	A	*	5/1998	Blanc et al.	99/289 T
6,269,736	B1		8/2001	Melton	
2004/0083897	A1		5/2004	Park	

FOREIGN PATENT DOCUMENTS

EP	1 169 957	1/2002

* cited by examiner

Primary Examiner—Reginald L Alexander
(74) *Attorney, Agent, or Firm*—Dykema Gossett PLLC

(57) **ABSTRACT**

An all-in-one beverage container for providing a mixed beverage product. The container includes a cup for holding a liquid, and a percolating mechanism for holding a beverage mix at a predetermined location within the cup, the beverage mix being provided in a solid, granular, gel and/or packaged form. A filter may be coupled to the percolating mechanism for separating the beverage mix from liquid disposable in the cup, and a stem may be coupled to the percolating mechanism for enabling axial movement of the percolating mechanism relative to a longitudinal axis of the cup. The stem may enable mixing of the beverage mix with the liquid and enable removal of the percolating mechanism from the cup upon mixing of the beverage mix with the liquid for thereby providing the mixed beverage product. The invention thus provides an all-in-one beverage container which is easy to use, hygienic and disposable.
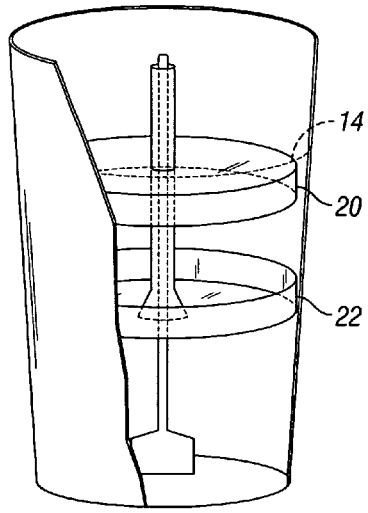
10 Claims, 3 Drawing Sheets