FIG. 1A

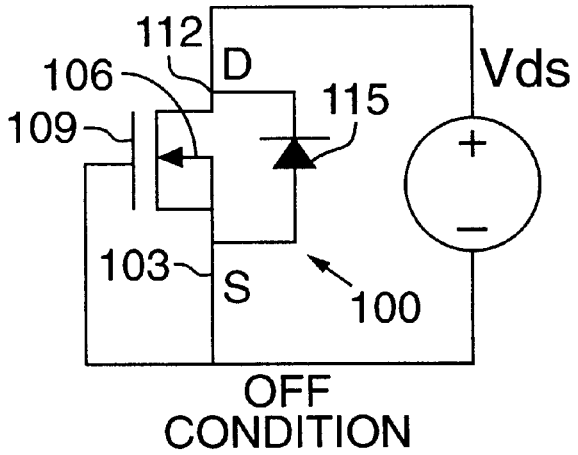
112
D
106
109
115
Vds
+
−
103
S
100
OFF
CONDITION

FIG. 1E

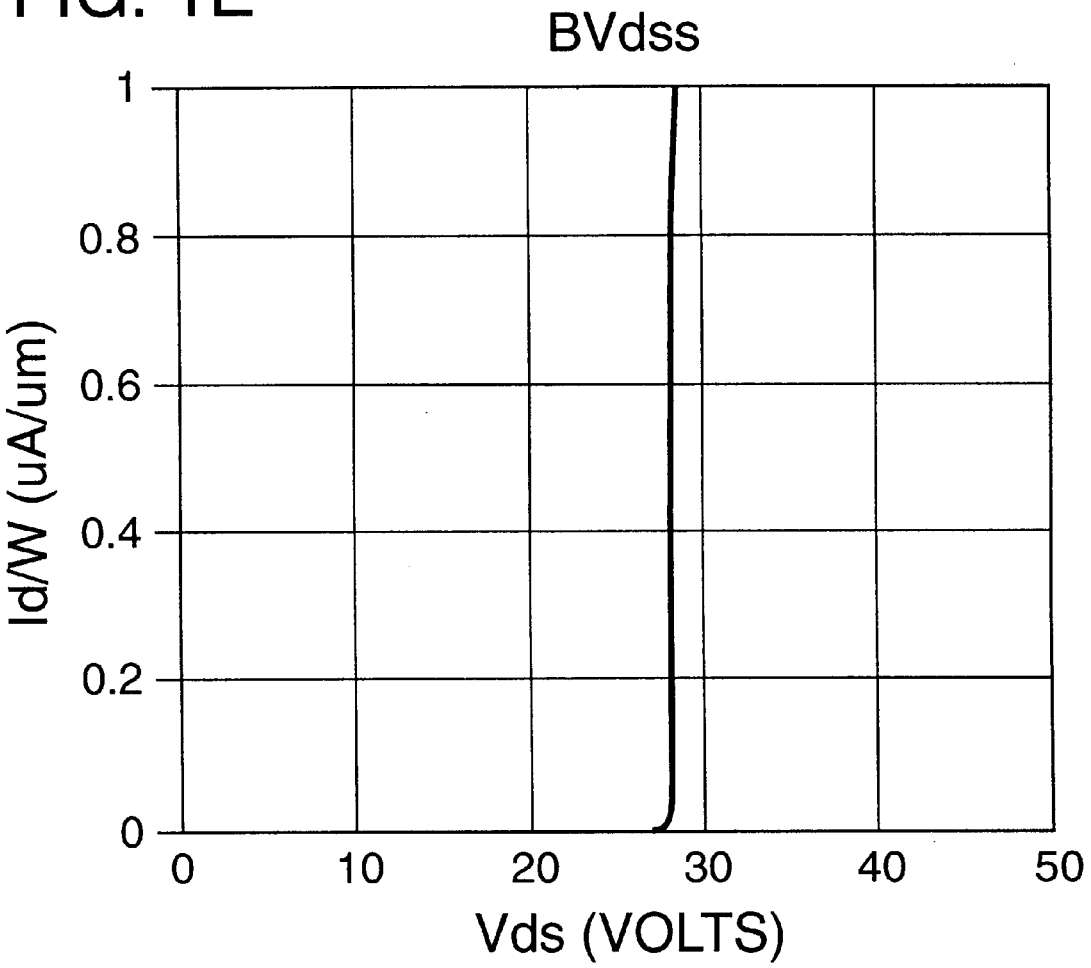
BVdss
1
0.8
0.6
0.4
0.2
0
Id/W (uA/um)
0
10
20
30
40
50
Vds (VOLTS)