Feb. 11, 1969 NAGAICHI SUGA 3,426,590

APPARATUS FOR EXPOSING SAMPLES TO LIGHT

Filed Nov. 10, 1964

Sheet 1 of 2

FIG. 1

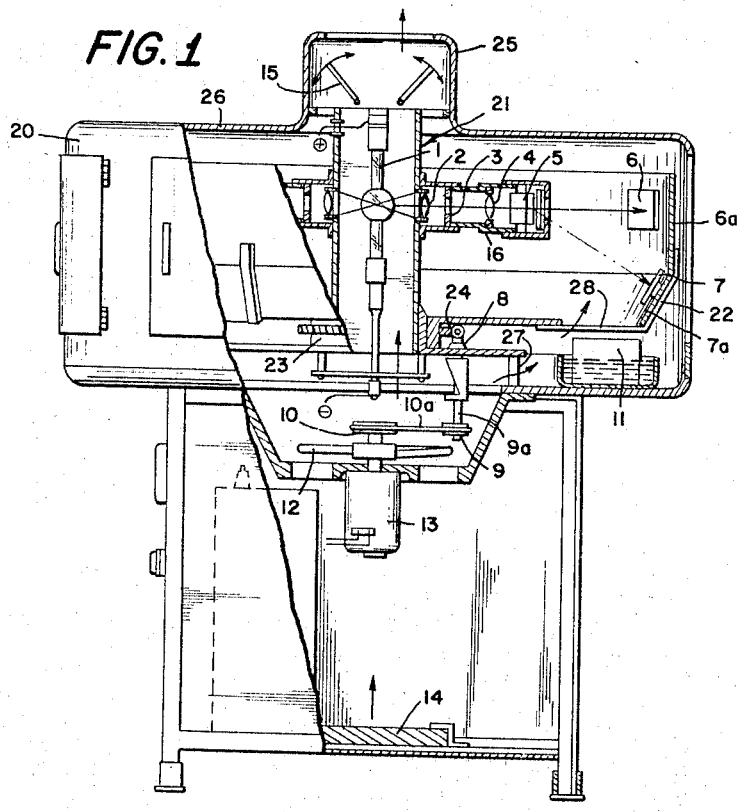

FIG. 3

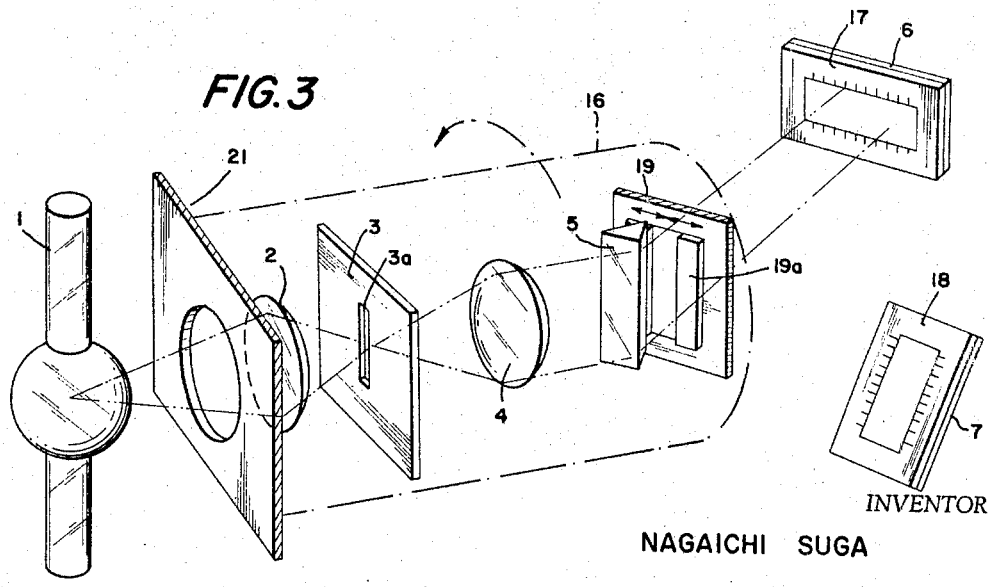

INVENTOR

NAGAICHI SUGA

BY Wenderoth, Lind & Ponack

ATTORNEYS