US009410590B2

(12) **United States Patent**
Jang et al.

(10) **Patent No.: US 9,410,590 B2**
(45) **Date of Patent: Aug. 9, 2016**

(54) **ACTUATOR ASSEMBLY FOR ELECTROMECHANICAL PARKING BRAKE**

(71) Applicant: **KEYANG ELECTRIC MACHINERY CO., LTD**, Seoul (KR)

(72) Inventors: **Woo Kyo Jang**, Gyeonggi-do (KR); **Chang Hwa Kim**, Chungcheongnam-do (KR); **Nam Hun Lee**, Gyeonggi-do (KR); **Seong Oh Lee**, Gyeonggi-do (KR)

(73) Assignee: **KEYAND ELECTRIC MACHINERY CO., LTD.**, Seoul (KR)

(*) Notice: Subject to any disclaimer, the term of this patent is extended or adjusted under 35 U.S.C. 154(b) by 0 days.

(21) Appl. No.: **14/550,681**

(22) Filed: **Nov. 21, 2014**

(65) **Prior Publication Data**

US 2015/0075923 A1 Mar. 19, 2015

Related U.S. Application Data

(63) Continuation of application No. PCT/KR2013/004259, filed on May 14, 2013.

(30) **Foreign Application Priority Data**

Apr. 17, 2013 (KR) 10-2013-0042094

(51) **Int. Cl.**
F16D 65/00 (2006.01)
F16D 65/14 (2006.01)
(Continued)

(52) **U.S. Cl.**
CPC ***F16D 65/14*** (2013.01); ***B60T 7/107*** (2013.01); ***B60T 13/741*** (2013.01); ***F16D 65/0006*** (2013.01); ***F16D 65/18*** (2013.01); ***H02K 7/116*** (2013.01); *F16D 2121/04* (2013.01);
(Continued)

(58) **Field of Classification Search**
CPC F16D 65/0006; F16D 65/14; F16D 2500/50866
See application file for complete search history.

(56) **References Cited**

U.S. PATENT DOCUMENTS

3,708,925 A * 1/1973 Ainoura B23F 19/052 451/47
7,021,415 B2 4/2006 Farmer et al.
(Continued)

FOREIGN PATENT DOCUMENTS

CN 1633373 6/2005
CN 1646823 7/2005
(Continued)

OTHER PUBLICATIONS

Korean Intellectual Property Office—Notice of Allowance Application No. 10-2013-0042094 Issued: Oct. 15, 2013 5 pages.
(Continued)

Primary Examiner — Robert A Siconolfi
Assistant Examiner — James Hsiao
(74) *Attorney, Agent, or Firm* — St. Onge Steward Johnston & Reens LLC

(57) **ABSTRACT**

An actuator assembly for an electromechanical parking brake greatly reduces vibration and noise of the actuator so that a high-quality vehicle may be realized by removing one of factors causing vibration and noise in the vehicle and greatly improves the easiness of assembly and handling together with attenuating vibration and noise by maximizing the excellent vibration and noise attenuating function by means of modularization which allows the actuator assembly to be handled as a single element.
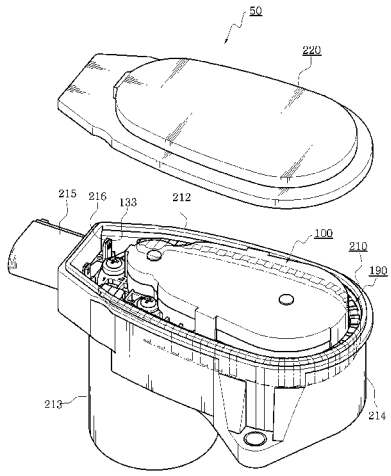
17 Claims, 19 Drawing Sheets