US009409690B2

(12) **United States Patent**
Varbanov

(10) **Patent No.: US 9,409,690 B2**
(45) **Date of Patent: Aug. 9, 2016**

(54) **CONTAINER AND POUCH**

(71) Applicant: **NESTEC S.A.**, Vevey (CH)

(72) Inventor: **Petar Varbanov**, Bulle (CH)

(73) Assignee: **Nestec S.A.**, Vevey (CH)

(*) Notice: Subject to any disclaimer, the term of this patent is extended or adjusted under 35 U.S.C. 154(b) by 14 days.

(21) Appl. No.: **14/490,805**

(22) Filed: **Sep. 19, 2014**

(65) **Prior Publication Data**

US 2015/0001212 A1 Jan. 1, 2015

Related U.S. Application Data

(63) Continuation of application No. 13/995,425, filed as application No. PCT/EP2011/073638 on Dec. 21, 2011.

(30) **Foreign Application Priority Data**

Dec. 21, 2010 (EP) 10196359

(51) **Int. Cl.**

B65D 25/16	(2006.01)
B65D 77/04	(2006.01)
B65D 30/20	(2006.01)
B65D 77/06	(2006.01)
B65D 21/02	(2006.01)
B65D 90/04	(2006.01)

(52) **U.S. Cl.**

CPC ***B65D 77/04*** (2013.01); ***B65D 21/0233*** (2013.01); ***B65D 31/10*** (2013.01); ***B65D 77/06*** (2013.01)

(58) **Field of Classification Search**

CPC B65D 77/04; B65D 31/10; B65D 77/06; B65D 21/0233

USPC 220/495.03, 495.01, 495.11, 495.06, 220/495.08, 495.09, 495.1, 835; 383/120

See application file for complete search history.

(56) **References Cited**

U.S. PATENT DOCUMENTS

1,955,385	A *	4/1934	Gray	220/495.11
2,055,086	A *	9/1936	Poppe	383/7
2,308,398	A *	1/1943	Stevens	220/495.11
3,128,904	A *	4/1964	Reilly	220/495.07

(Continued)

FOREIGN PATENT DOCUMENTS

CN	101123888	2/2008
CN	101432007	5/2009

(Continued)

OTHER PUBLICATIONS

Russian Office Action for Application No. 2013133987/12(050838) dated Nov. 12, 2015—5 pages.

(Continued)

Primary Examiner — J. Gregory Pickett
Assistant Examiner — Niki M Eloshway
(74) *Attorney, Agent, or Firm* — K&L Gates LLP

(57) **ABSTRACT**

The present invention relates to a container and a pouch. The container and pouch is preferably mutually shaped so that the pouch fits tightly into the container. The container comprises a closure for closing the container and preferably being adapted to maintain the pouch in an open state in a position where its opening is facing upwardly. In addition, the closure comprises a lid, allowing re-closable access to the contents stored in the pouch.
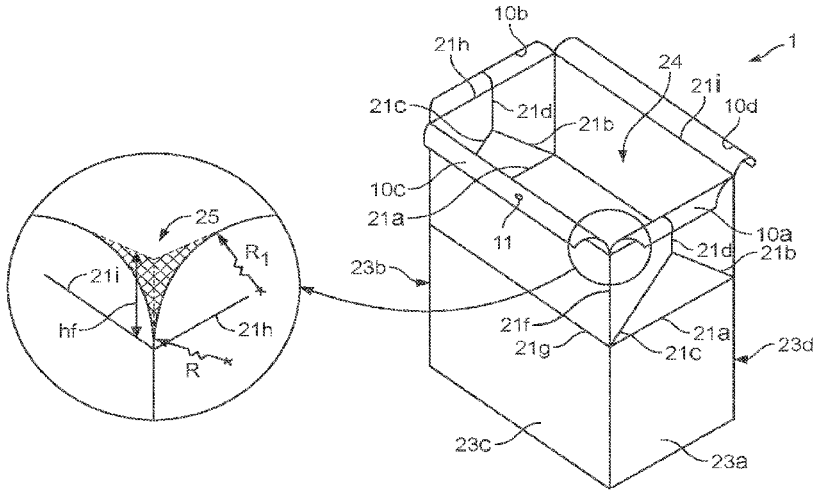
13 Claims, 7 Drawing Sheets