Oct. 5, 1965 E. BASSAN 3,209,390

LINK HINGES

Filed July 5, 1963

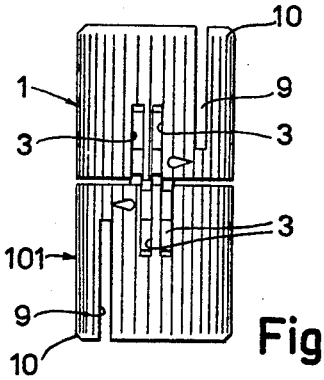

Fig. 1

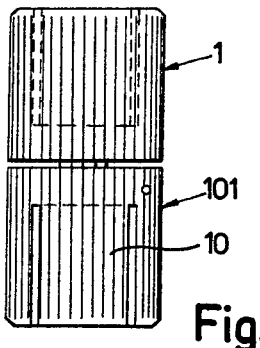

Fig. 2

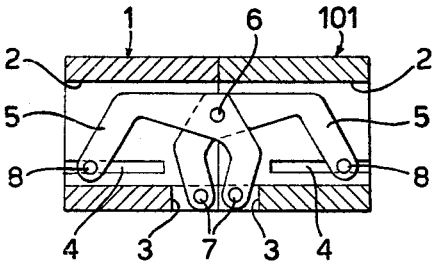

Fig. 3

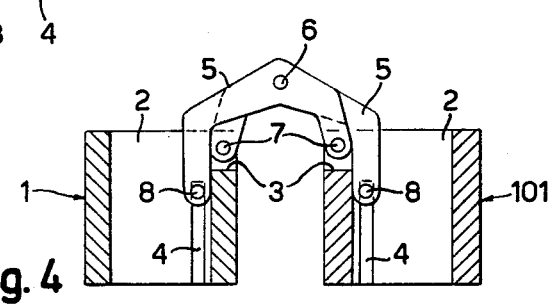

Fig. 4

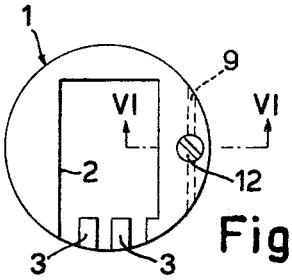

Fig. 5

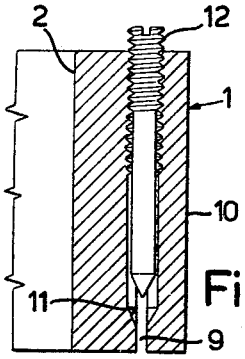

Fig. 6

INVENTOR

ERACLIC BASSAN

BY Mirie and Smiley

ATTORNEY