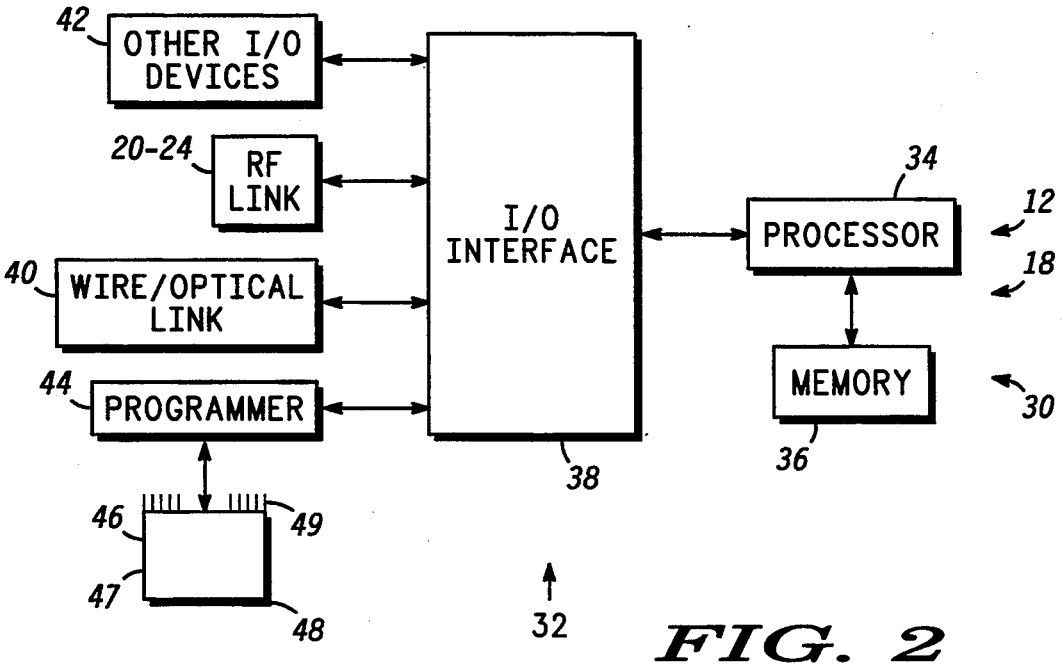
42
OTHER I/O DEVICES
20-24
RF LINK
40
WIRE/OPTICAL LINK
44
PROGRAMMER
I/O INTERFACE
38
34
PROCESSOR
12
18
MEMORY
36
30
46
49
47
48
32

FIG. 2

FIG. 3

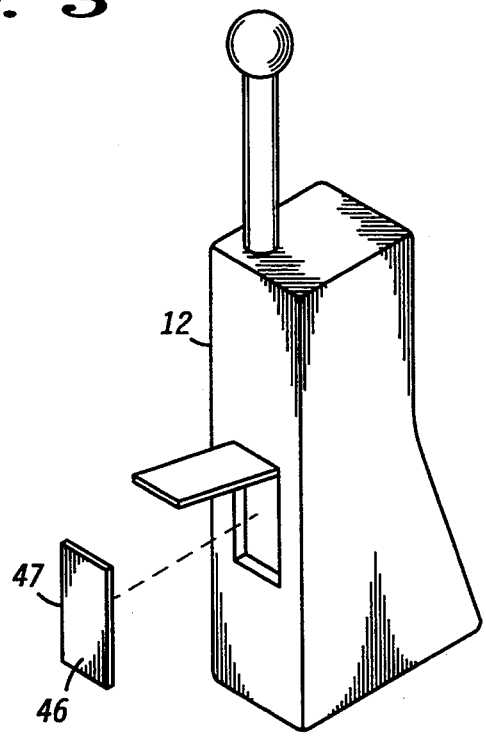
12
47
46