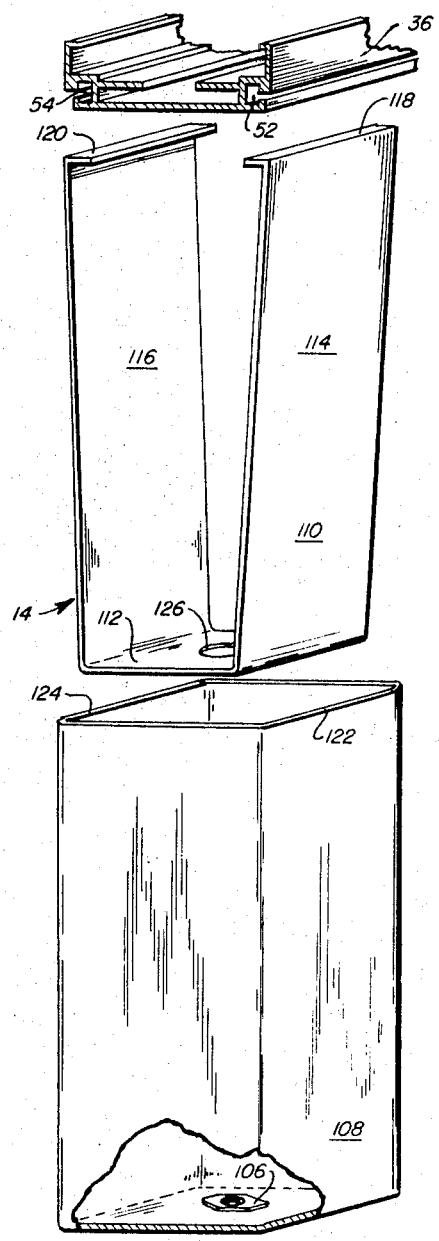

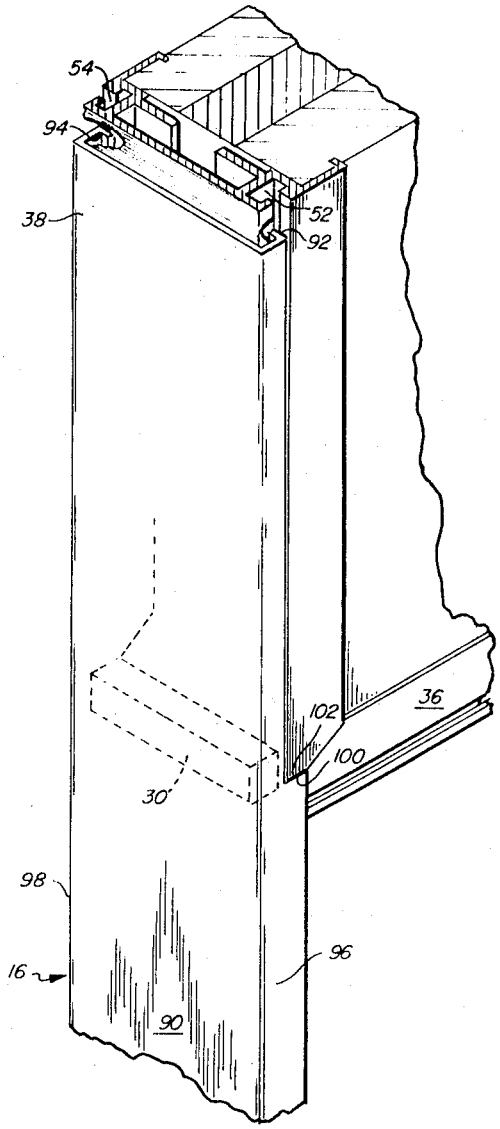

FIG. 9

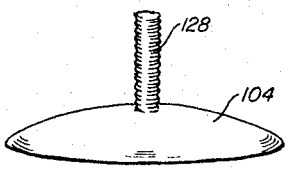

FIG. 10

INVENTORS
JAMES E. AYSTA &
WILLIAM H. P. TACKE
BY
THEIR ATTORNEY