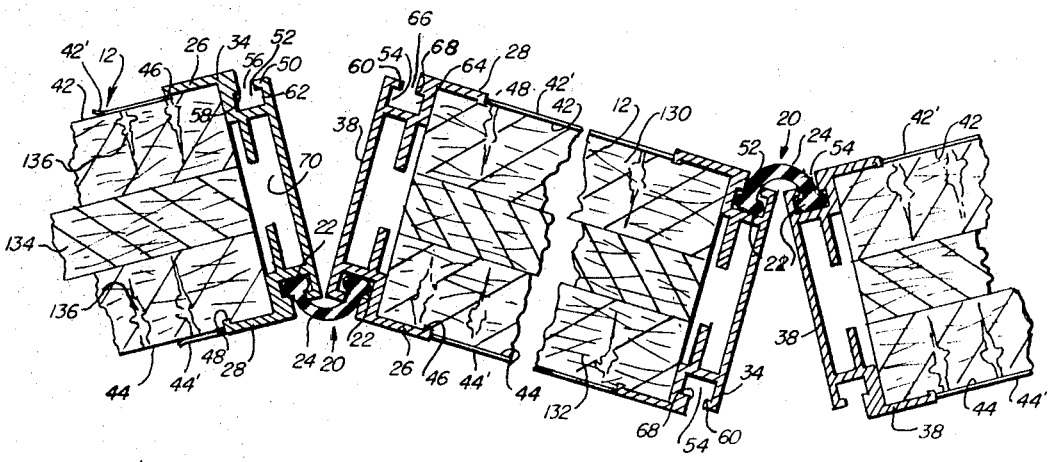

FIG. 6

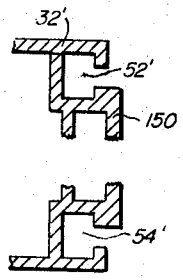

FIG. 12

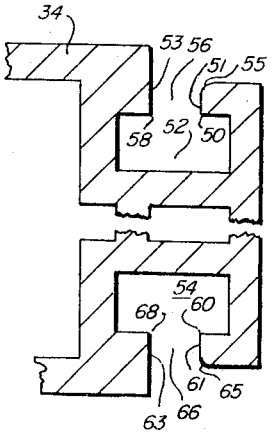

FIG. 11

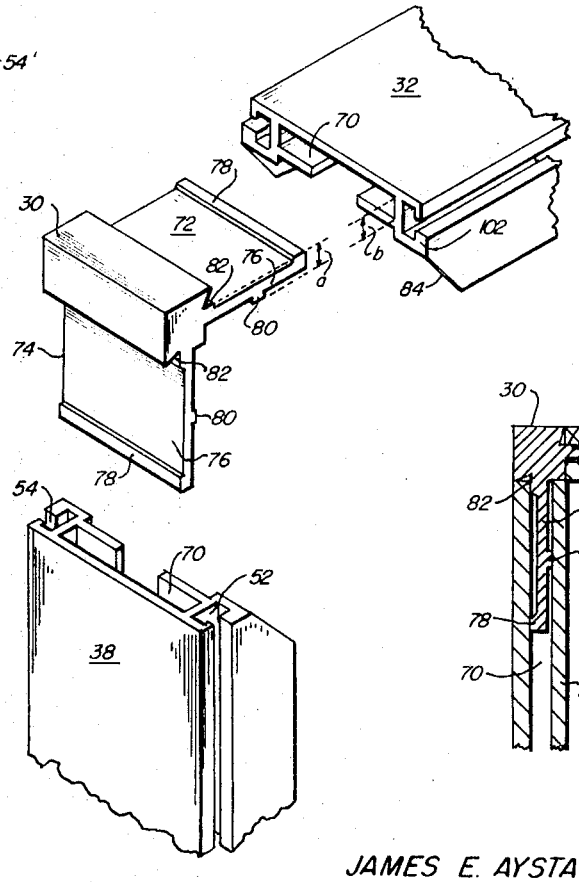

FIG. 7

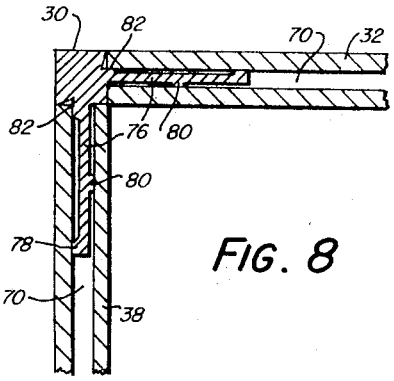

FIG. 8

INVENTORS
JAMES E. AYSTA & WILLIAM H. P. TACKE
BY
G. A. Gustafson
THEIR ATTORNEY