US007190389B1

(12) **United States Patent**
Abe et al.

(10) **Patent No.: US 7,190,389 B1**
(45) **Date of Patent: Mar. 13, 2007**

(54) **STEREO CAMERA**

(75) Inventors: **Tetsuya Abe**, Tokyo (JP); **Takayuki Sensui**, Tokyo (JP)

(73) Assignee: **Pentax Corporation**, Tokyo (JP)

(*) Notice: Subject to any disclaimer, the term of this patent is extended or adjusted under 35 U.S.C. 154(b) by 65 days.

(21) Appl. No.: **09/611,364**

(22) Filed: **Jul. 6, 2000**

(30) **Foreign Application Priority Data**

Jul. 7, 1999 (JP) 11-193107

(51) **Int. Cl.**
H04N 13/00 (2006.01)

(52) **U.S. Cl.** **348/42**; 382/154

(58) **Field of Classification Search** 348/42, 348/47, 49, 218, 139, 51, 44, 36, 48, 261, 348/208, 262; 382/103, 106, 154
See application file for complete search history.

(56) **References Cited**

U.S. PATENT DOCUMENTS

4,818,858 A * 4/1989 Sorimachi et al. 250/203.2
5,420,438 A * 5/1995 Sensui et al. 250/201.8
5,570,150 A 10/1996 Yoneyama et al.
5,581,314 A 12/1996 Yoneyama et al.
5,652,926 A * 7/1997 Saito 396/97
5,668,595 A * 9/1997 Katayama et al. 348/218
5,748,998 A * 5/1998 Ishiguro et al. 396/88
5,819,016 A * 10/1998 Watanabe et al. 345/419
5,864,360 A * 1/1999 Okauchi et al. 348/47
5,870,178 A * 2/1999 Egawa et al. 356/3.03
5,883,662 A * 3/1999 Zanen 348/49
5,889,553 A * 3/1999 Kino et al. 348/218.1
5,990,943 A * 11/1999 Yamazaki 348/208
6,041,186 A * 3/2000 Sensui 396/80
6,326,994 B1 * 12/2001 Yoshimatsu 348/46
6,385,334 B1 * 5/2002 Saneyoshi et al. 382/154
6,449,004 B1 * 9/2002 Okisu et al. 348/44
6,507,359 B1 * 1/2003 Muramoto et al. 348/47

FOREIGN PATENT DOCUMENTS

EP 0830034 3/1998
JP 10155104 6/1998

* cited by examiner

Primary Examiner—Mehrdad Dastouri
Assistant Examiner—Behrooz Senfi
(74) *Attorney, Agent, or Firm*—Greenblum & Bernstein, P.L.C.

(57) **ABSTRACT**

A stereo camera includes a pair of photographing optical systems arranged in a common plane so that a common photographing coverage occurs between a pair of photographing areas taken by the pair of photographing optical systems, an object distance measuring device, a convergence angle adjustment mechanism adapted to vary an angle of convergence defined by, and between, the optical axes of the pair of photographing optical systems, so as to adjust an amount of common photographic coverage of the pair of photographing optical systems, and a controller adapted to control the convergence angle adjustment mechanism in accordance with object distance data obtained by the object distance measuring device.
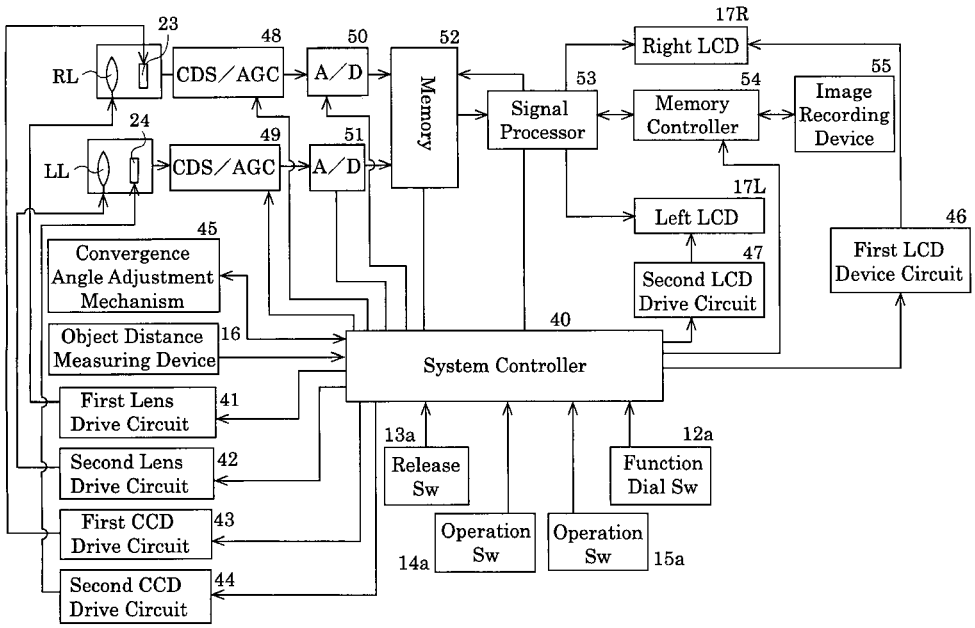
7 Claims, 11 Drawing Sheets