July 17, 1928. 1,677,689

L. T. ROBINSON ET AL

VAPOR ELECTRIC DEVICE

Filed Nov. 19, 1925

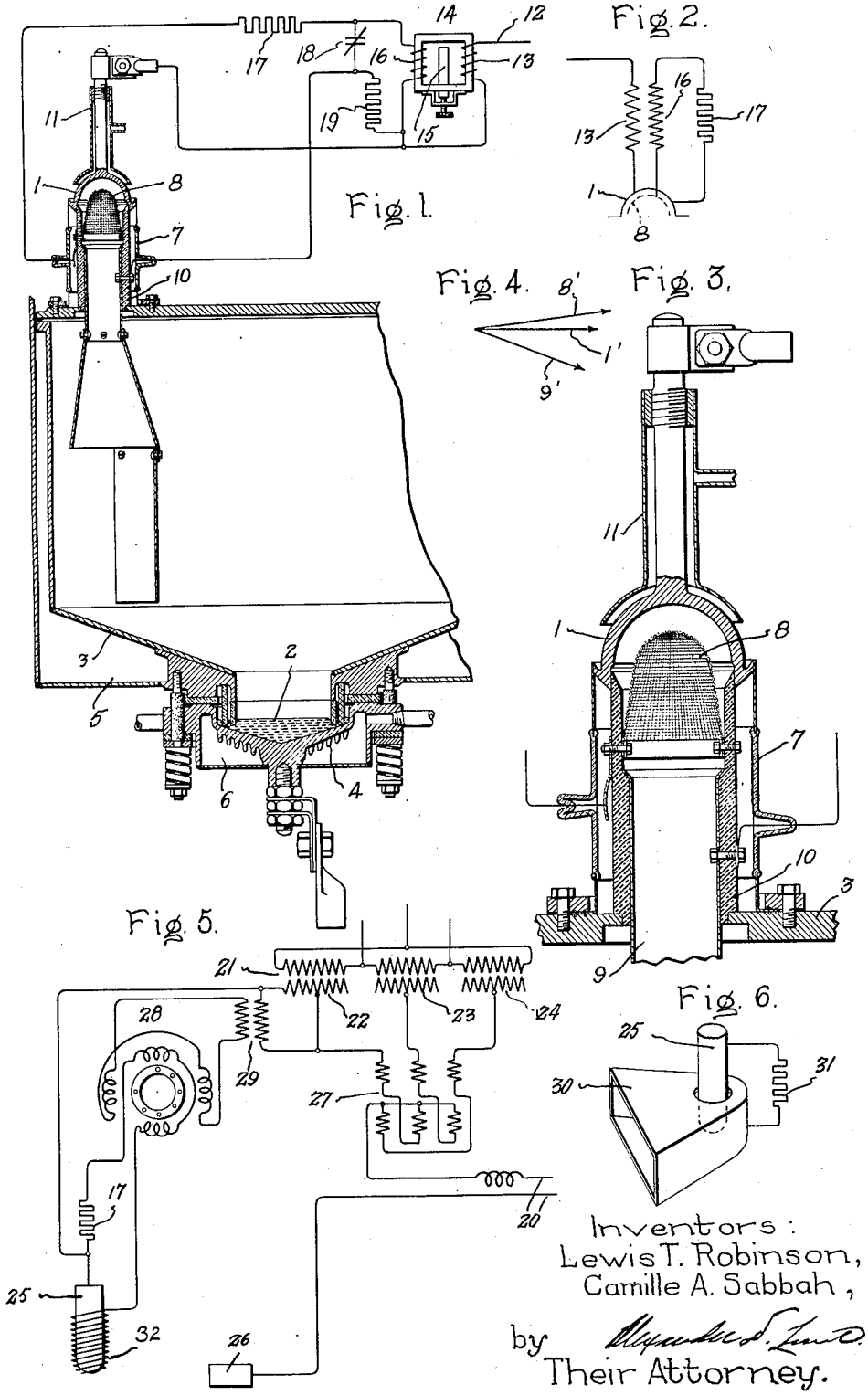

Inventors:
Lewis T. Robinson,
Camille A. Sabbah,
by Their Attorney.