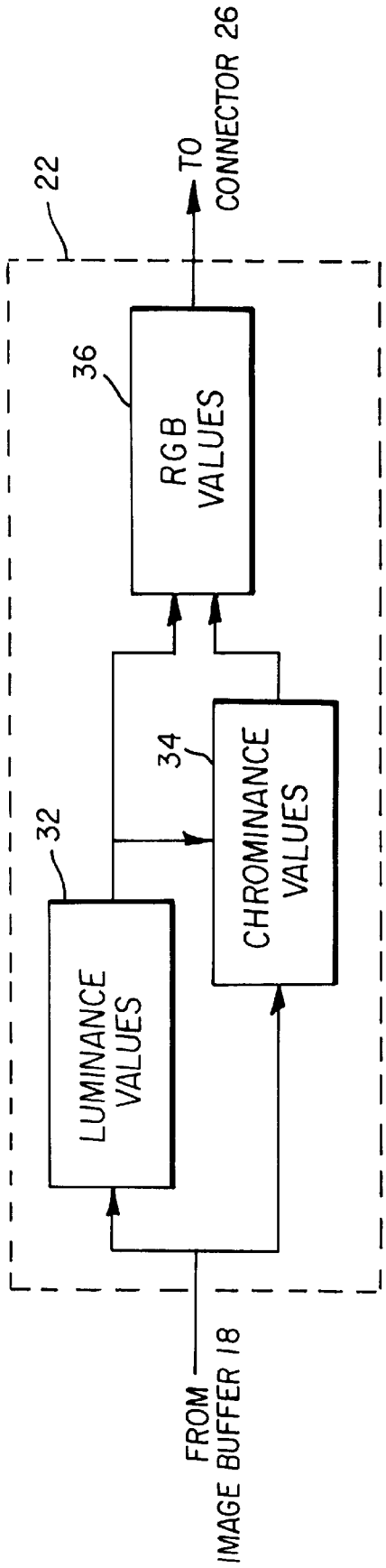
22
FROM
IMAGE BUFFER 18
32
LUMINANCE
VALUES
34
CHROMINANCE
VALUES
36
RGB
VALUES
TO
CONNECTOR 26

FIG. 2