W. C. HELLER,

CABINET FOR PHONOGRAPH RECORDS.

APPLICATION FILED FEB. 24, 1917.

1,262,789.

Patented Apr. 16, 1918.

2 SHEETS—SHEET 1.

Fig. 1.

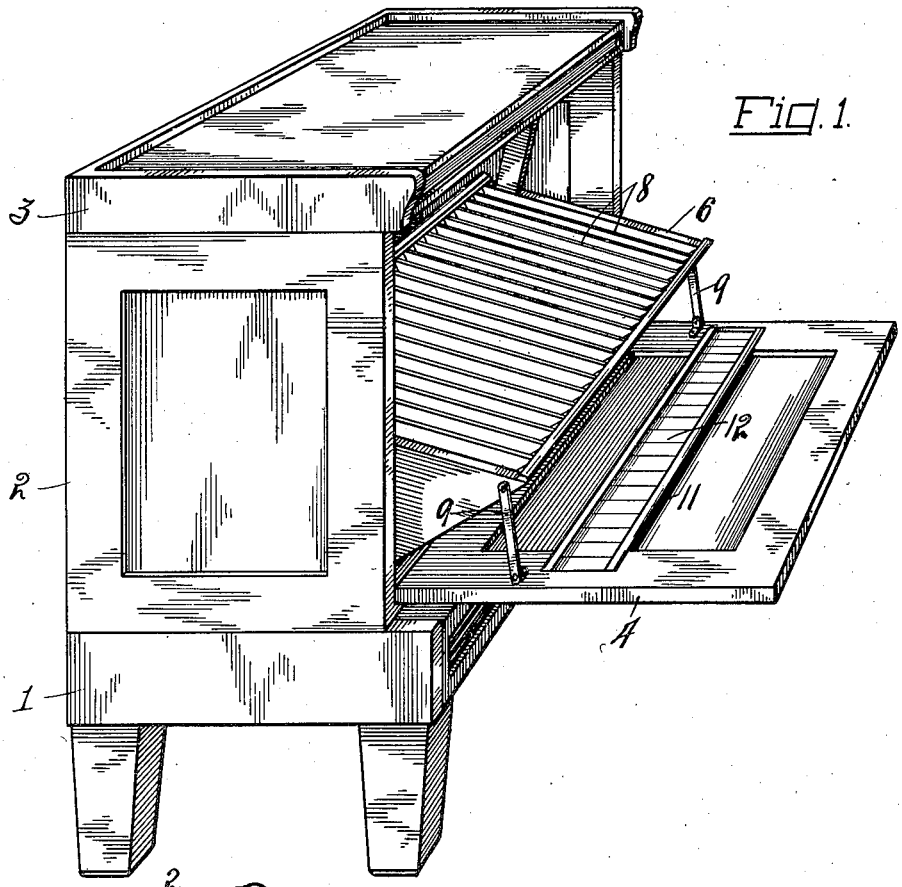

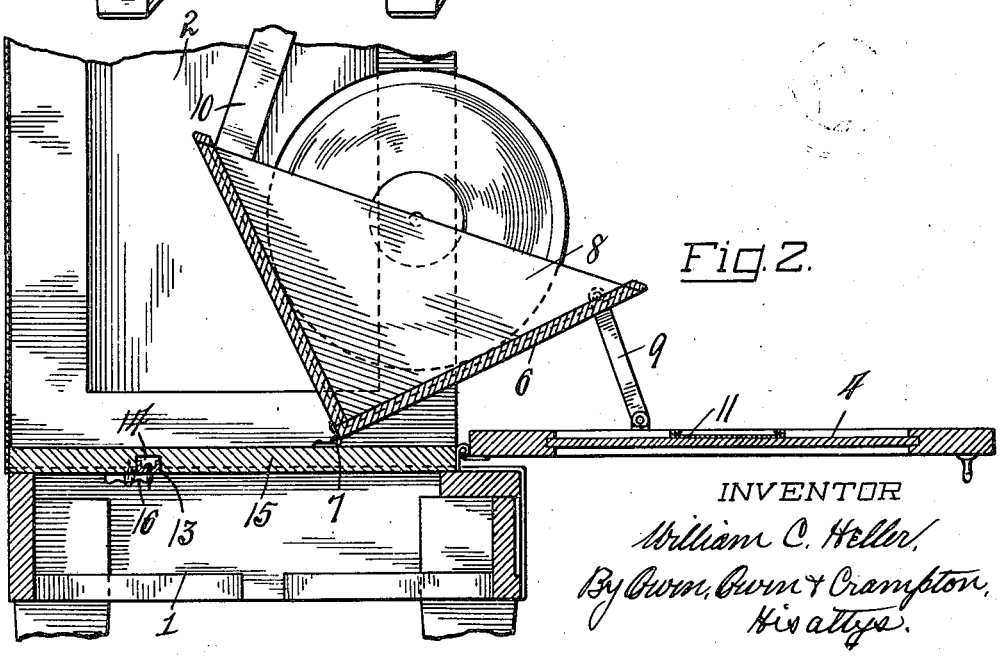

Fig. 2.

INVENTOR

William C. Heller,

By Owen, Owen & Crampton,

His attys.