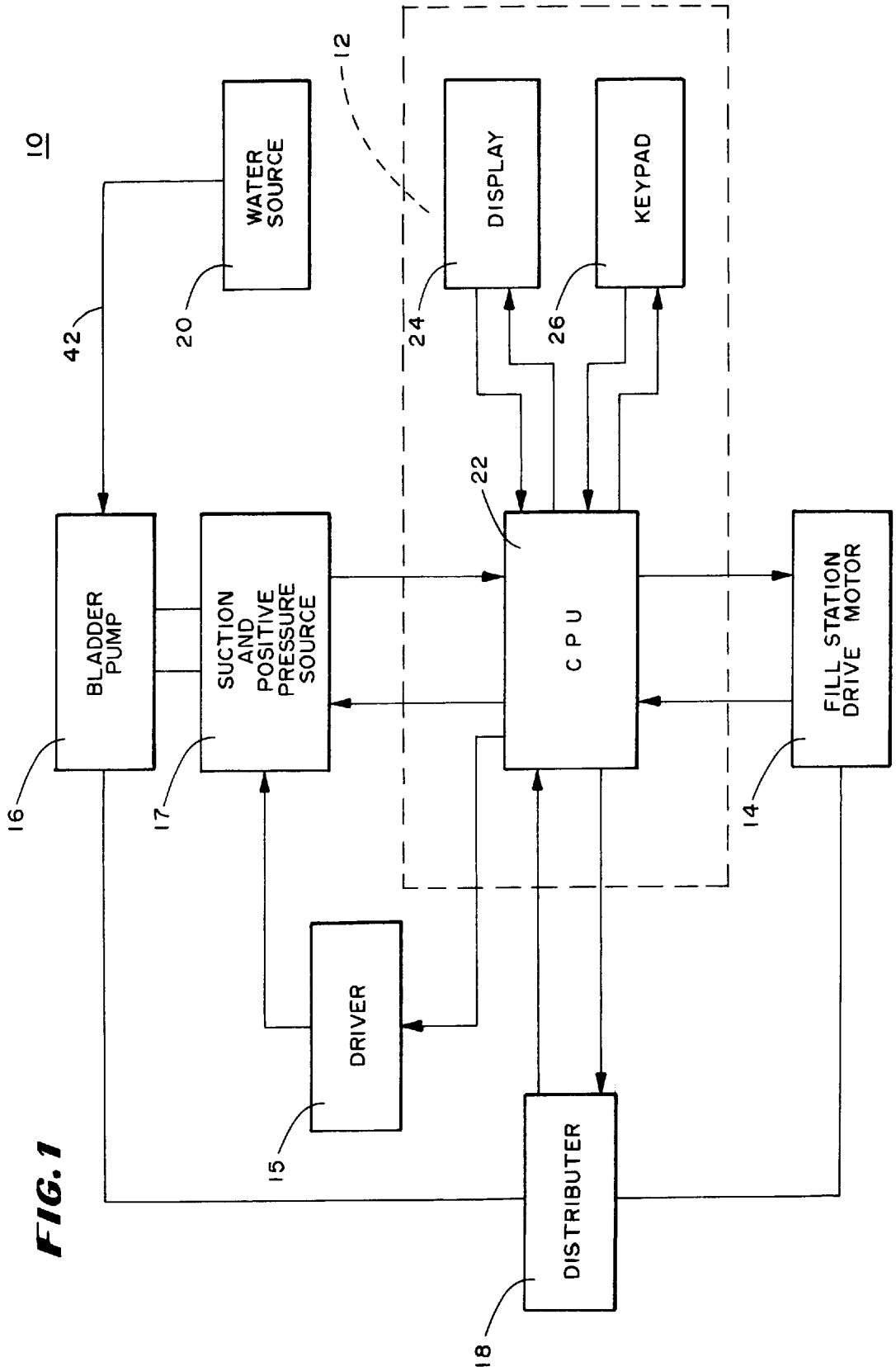
10
12
WATER SOURCE
20
42
DISPLAY
24
KEYPAD
26
22
BLADDER PUMP
16
SUCTION AND POSITIVE PRESSURE SOURCE
17
C P U
FILL STATION DRIVE MOTOR
14
DRIVER
15
DISTRIBUTER
18

FIG. 1